展頻通訊
(Spread Spectrum Communications)

國立清華大學電機系暨通訊工程研究所
蔡育仁
台達館 821 室
Tel: 62210
E-mail: yrtsai@ee.nthu.edu.tw

課程內容與要求

- 教科書：R. L. Peterson, R. E. Ziemer, and D. E. Borth **Introduction to Spread Spectrum Communications**, Prentice Hall International, Inc. (新月圖書)
- 課程內容
  - Basic Concepts
  - Spread-Spectrum Systems
  - Binary Shift-Register Sequences
  - Code Tracking Loops
  - Initial Synchronization (Acquisition)
  - CDMA Systems (W-CDMA System Specification)
- 講義位置：https://nyquist.ee.nthu.edu.tw/WCS.html
  (Password: 20260223#SSCCOM5160@821)

課程內容與要求

- 參考書籍：
  - Valery P. Ipatov, **Spread Spectrum and CDMA – Principles and Applications**, John Wiley & Sons, 2005.
  - K. Fazel and S. Kaiser, **Multi-Carrier and Spread Spectrum Systems**, John Wiley & Sons, 2003.
  - Kamil Sh. Zigangirov, **Theory of Code Division Multiple Access Communication**, John Wiley & Sons, 2004.
- Introductory Courses: Signals and Systems, Probability Theory, Communications System II (Digital Communications)
- 課程要求
  - Homework (30 %)
  - Midterm Exam (35 %)
  - Final Exam (35 %)
- 助教時間：每週四 13:30~15:30, CL 605 室
- 助教：TWNTHUCOM5160@gmail.com

Introduction of Spread Spectrum Applications

Introduction

- **Spread-spectrum** modulation refers to any modulation scheme that produces a spectrum for the transmitted signal **much wider** than the bandwidth of the information being transmitted
  - To provide some degree of resistance to interference and jamming (**jamming resistance, JR**)
  - To provide a means for masking the transmitted signal in the background noise (**low probability of intercept, LPI**)
  - To provide resistance to the interference from multiple transmission paths (**anti-multipath interference**)
  - To permit the access of a common channel by more than one user (**multiple access capability ⇒ CDMA**)
  - To provide a means for measuring the distance between two points or time difference (**ranging, channel sounding**)

Standard Components

- The **standard** components of **a communications system** are
  - Information source, including the source encoder
  - Data modulator
  - Power amplification (including the transmit antenna for radio communications)
  - Receiver front-end (including the receive antenna for radio communications)
  - Timing and Synchronization
  - Data demodulator
  - Information sink, including the source decoder

Nonstandard Components

- The **nonstandard** components of communications systems may include
  - Encryptor
  - **Channel encoder**
  - **Spread-spectrum modulator**
  - **Spread-spectrum despreader**
  - **Channel decoder**
  - Decryptor
- Items 2 through 5 are standard in a spread-spectrum communications system

Digital Communications System

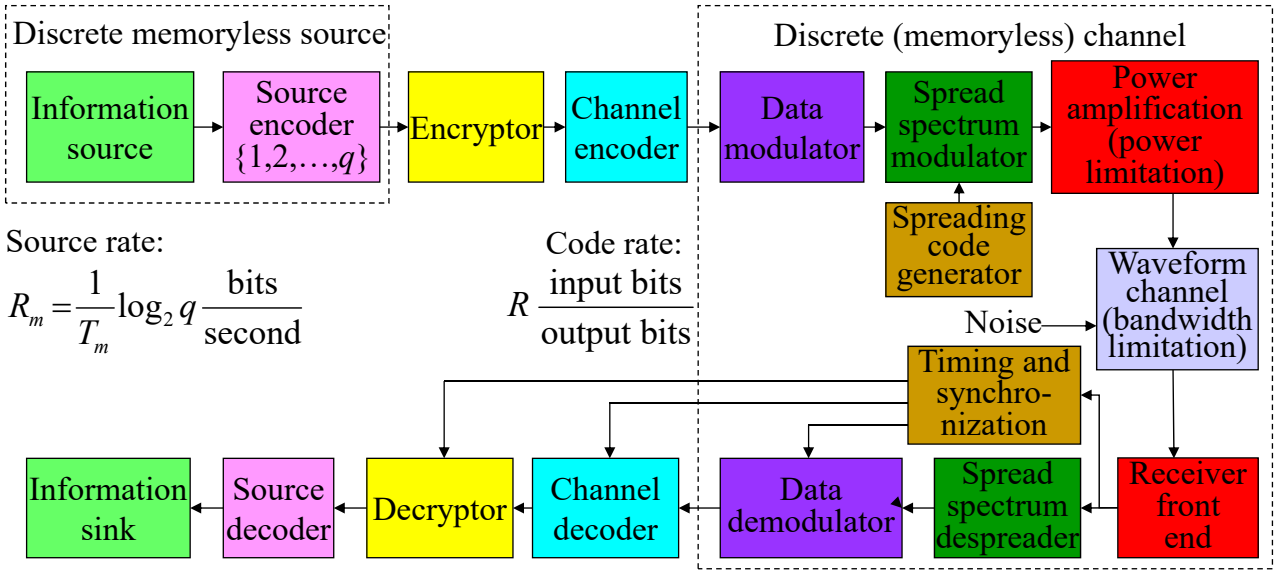

Spread-Spectrum Communications System

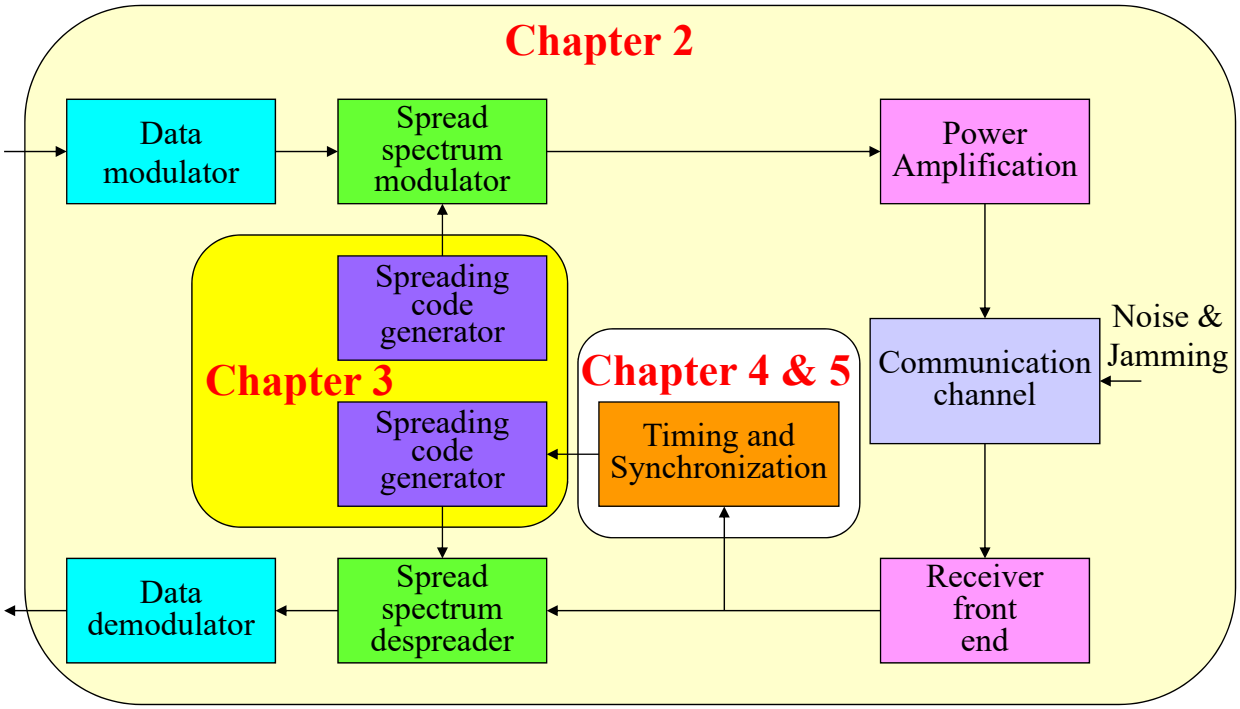

Some Applications of Spread-Spectrum

- **Communications:**
  - Military communications (unmanned aerial vehicle, UAV, Link 16)
  - Telecommunications (3G systems)
  - Data communications (Bluetooth, LoRa)
- **Wireless locating:**
  - Global Positioning System (GPS)
- **Consumer electronics:**
  - Wireless remote controls
- **Measurement equipment:**
  - Channel sounding
  - Distance (time) measuring

Global Positioning System

- 24 satellites in 6 **12-hour orbits** spaced uniformly around the earth
- Each satellite transmits two spread spectrum signals
  - 1575.42 MHz (L1 signal)
  - 1227.60 MHz (L2 signal)
- L1 signal (Coarse/Acquisition or C/A code):
  - Spread by a **short code** to make acquisition easy
  - Provide **coarse** positioning accuracy
- L2 signal (Precise or P code):
  - Spread by a **long code**
  - Provide **precise** positioning accuracy (about **a factor of ten** better than the coarse positioning accuracy)



Global Positioning System (Cont.)

- The C/A code is available for the public, and the P code is generally reserved for military applications.
- The C/A codes are **Gold codes** with a period of **1023 chips** at a transmission rate of **1.023 Mchip/s**
  - Repeat for every **1 ms**
  - Carrier a **50 bit/s** navigation message
  - A chip corresponds to a distance **293 m**

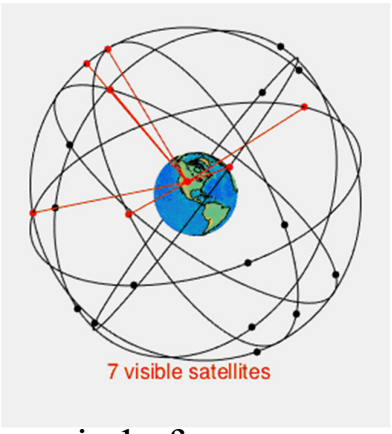

- The P code of a satellite is a sequence with a period of **6.187104×10^{12} chips** at a transmission rate of **10.23 Mchip/s**
  - A segment drawn from the **master P code** (38 segments)
  - Repeat for every **7 days**
  - A chip corresponds to a distance **29.3 m**

Mobile Cellular Systems

- **Third generation (3G) cellular systems** are all digital standards applying **CDMA** technology
  - **cdma2000** – US, **W-CDMA** – Europe

Parameter	**W-CDMA**	**cdma2000**
Carrier spacing	5 MHz	3.75 MHz
Chip rate	4.096 MHz	3.6864 MHz
Data modulation	BPSK	FW – QPSK; RV - BPSK
Power control frequency	1500 Hz	800 Hz
Frame duration	10 ms	20 ms (also 5, 30, 40)
Coding	Turbo and convolutional	Turbo and convolutional
Base stations synchronized?	Asynchronous	Synchronous
Forward link pilot	TDM dedicated pilot	CDM common pilot
Antenna beamforming	TDM dedicated pilot	Auxiliary pilot

Unlicensed Band Communication Systems

- **Unlicensed band** communication systems are generally applying spread spectrum technologies
  - **Frequency Hopping** or **Direct Sequence** spread spectrum
- WLAN (Wireless Local Area Network): IEEE 802.11b
- Bluetooth
- LoRa (Chirp Spread Spectrum)
- Unmanned Aerial Vehicles (UAV)/Drones Communications and Control
- Cordless Phone
- …

Chapter 1
Introduction

Contents

- Basic concepts of Spread Spectrum Technologies
- Linear FM (Chirp Signal)
- Time Hopping Spread Spectrum (THSS)
- Frequency Hopping Spread Spectrum (FHSS)
- Direct Sequence Spread Spectrum (DSSS)
- Hybrid Modulations

Basic concepts of Spread Spectrum Technologies

Introduction

- The transmitted signals are generally selected to be relatively efficient in their use of the communication resources
  - **Power** and **Bandwidth**
- Many real-world communication channels are modeled as stationary **AWGN channels**
- Other important channels:
  - A channel might be **jammed by a continuous wave** (CW) tone (military communication systems)
  - A channel might have **multiple propagation paths** between the transmitter and the receiver (multipath fading channels)
- Spread spectrum is a **modulation** and **demodulation** technique to mitigate the effects of jamming and multipath interferences
  - Not data modulation/demodulation

Spread Spectrum Characteristics

- For a spread spectrum system, the modulation/demodulation must have the following characteristics:
  - The transmitted signal energy must occupy a bandwidth **much larger** than the information bit rate (symbol rate)
  - The **demodulation** must be accomplished, in part, by correlating the received signal with a despreading signal
    - Which is a replica of the signal used at the transmitter to spread the information signal

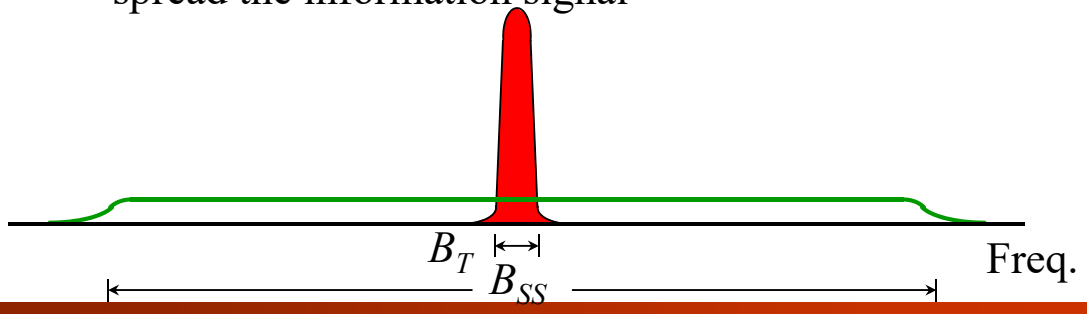

Spread Spectrum Characteristics (Cont.)

- Some modulation techniques use a transmission bandwidth much larger than the minimum required transmission bandwidth but **are not** spread spectrum modulations:
  - Low-rate coding
  - Wideband frequency modulation (FM)
- Spread spectrum techniques are very useful in solving a wide range of communications problems
- The amount of **performance improvement** that is achieved through the use of spread spectrum is defined as
  - The **processing gain** of the spread spectrum system
- The processing gain is often approximated as
  - The **ratio** of the spread bandwidth to the information rate

Spread Spectrum Waveforms

- There are various types of spread spectrum waveforms:
  - Linear FM (Chirp Signal)
  - Time Hopping Spread Spectrum (THSS)
  - Frequency Hopping Spread Spectrum (FHSS)
  - Direct Sequence Spread Spectrum (DSSS)
  - Hybrid Modulations

Linear FM

Linear FM Characteristics

- The linear FM signal is a **continuous** transmission technology
  - It is commonly used in **radar systems** (pulse compression), and LoRa (low-power wide-area network, LPWAN)
  - A sinusoidal wave with its frequency linearly varying with time
  - **Up-chirp** (**Down-chirp**): the frequency is linearly **increasing** (**decreasing**) with time from an initial frequency to a final frequency
  - No **pseudorandom (PN) code** is required for signal generation

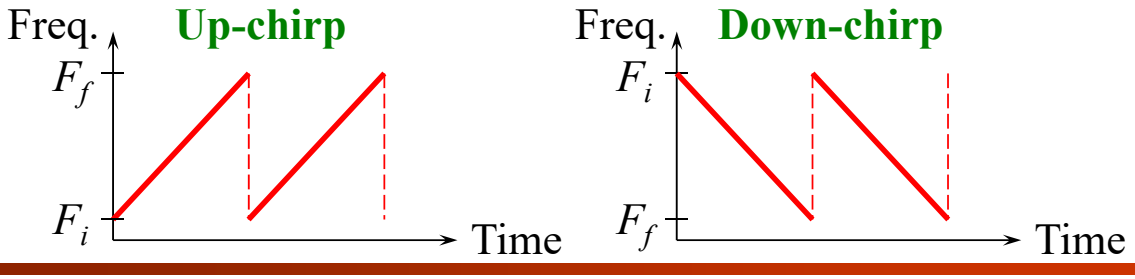

Linear FM Generation

- Linear FM signal can be implemented by using
  - **Voltage control oscillator** (VCO): with a limited frequency range
  - **Surface acoustic wave** (SAW) device: with limited output power

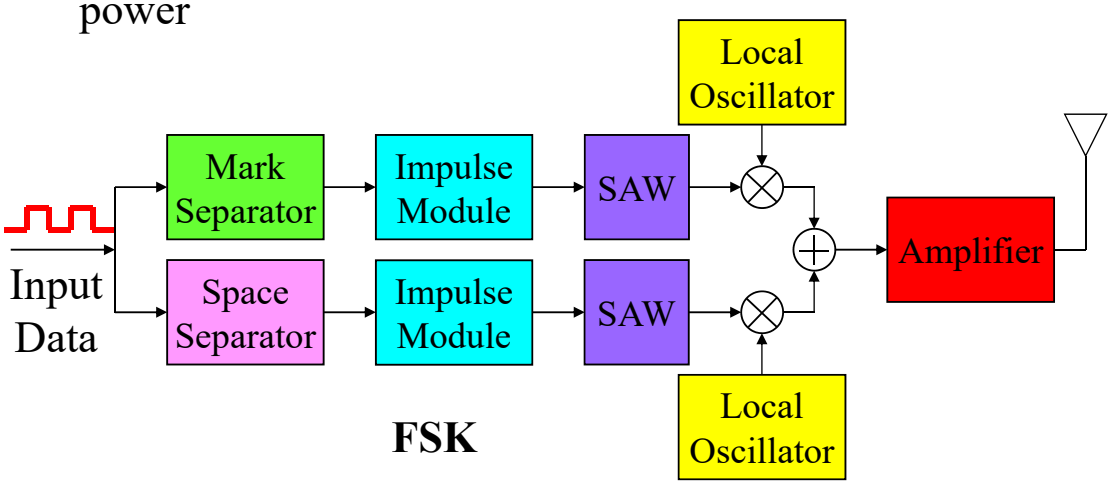

Linear FM Power Spectrum

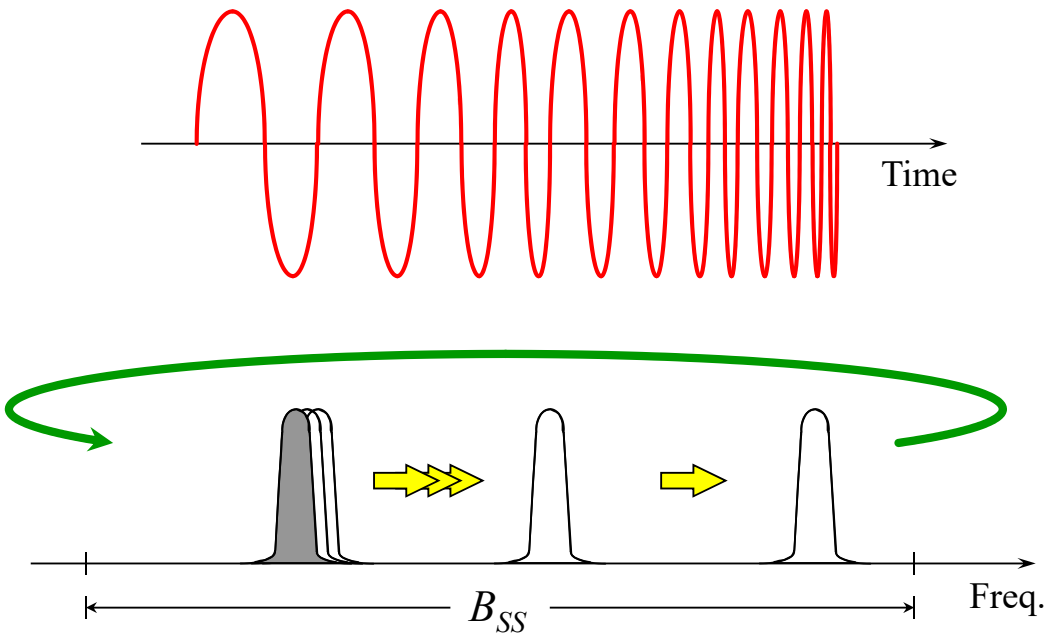

Time Hopping Spread Spectrum

Time Hopping Characteristics

- Time hopping spread spectrum is a **discontinuous** (in time domain) transmission technology
  - Time has been segmented into multiple T_s-second intervals
  - Take **basic modulation** technique but **raising** the data symbol rate to a multiple of M_T
  - Each interval contains a signal pulse **pseudo-randomly** located at **one** of the M_T locations within the interval

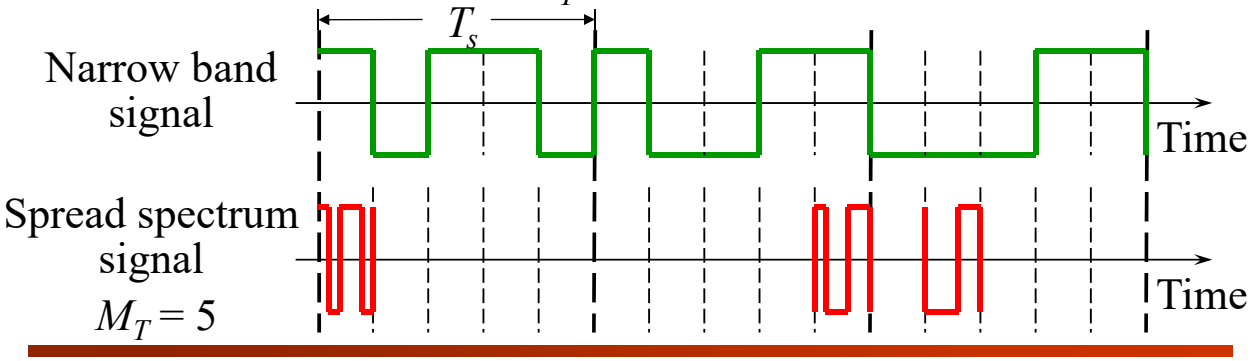

Time Hopping Generation

- In the generation of time hopping spread spectrum signals
  - A pseudorandom (PN) code is needed for time slot selection
- For the active time slot, the transmitted signal is a **wideband signal**
- The processing gain is M_T

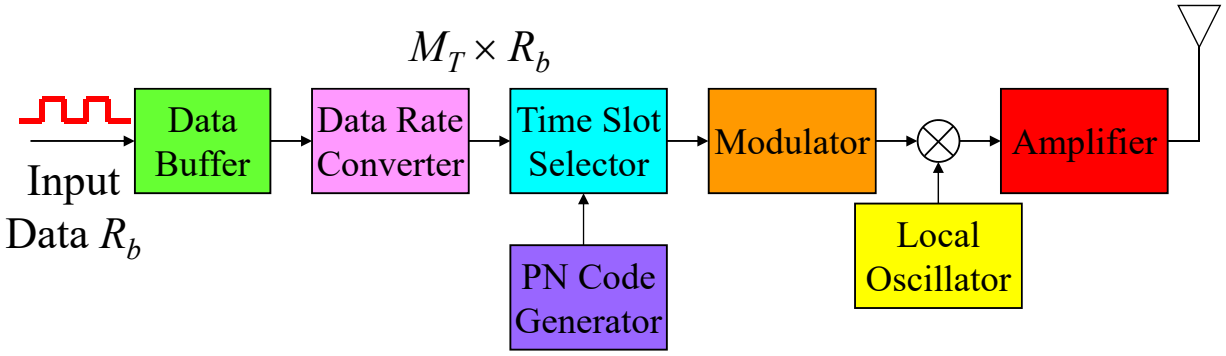

Time Hopping Power Spectrum

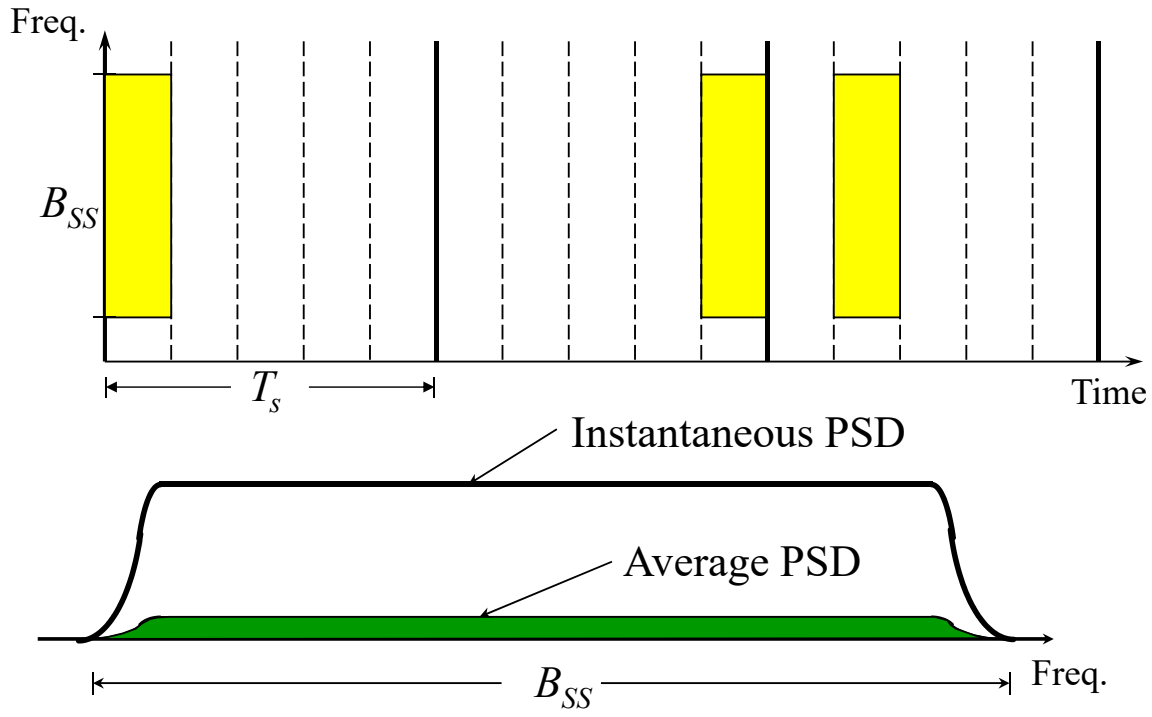

Frequency Hopping Spread Spectrum

Frequency Hopping Characteristics

- Frequency hopping is the only spread spectrum technology that can use **multiple discontinuous** transmission bands
  - It has been used in GSM systems, Bluetooth, and WLANs
  - The entire band is divided into **multiple channels**, each of which is equal to the bandwidth for information transmission

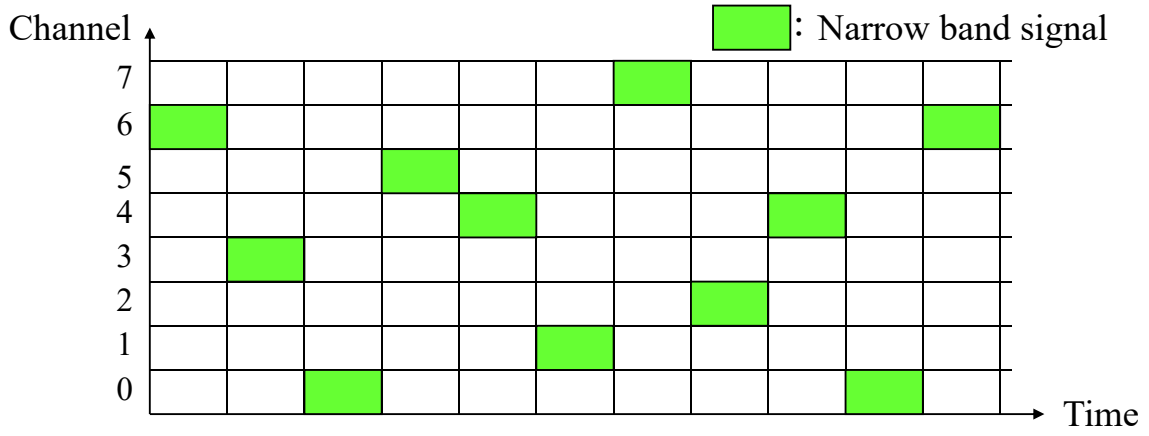

Frequency Hopping Generation

- FHSS takes basic modulation technique and changes the carrier frequency in a **pseudorandom** manner
  - A pseudorandom (PN) code is needed for the carrier frequency selection

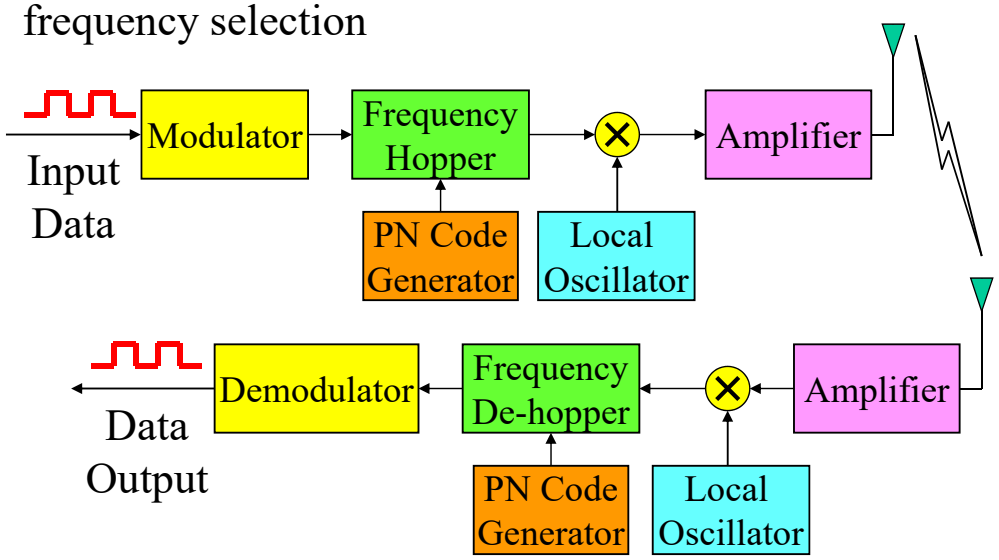

SFH & FFH

- According to the **hopping rate** (irrelevant to the processing gain) FHSS can be further divided into two classes:
  - **Slow Frequency Hopping** (SFH): transmit **more than one** symbol in a single hope duration
  - **Fast Frequency Hopping** (FFH): transmit **one or less than one** symbol in a single hope duration

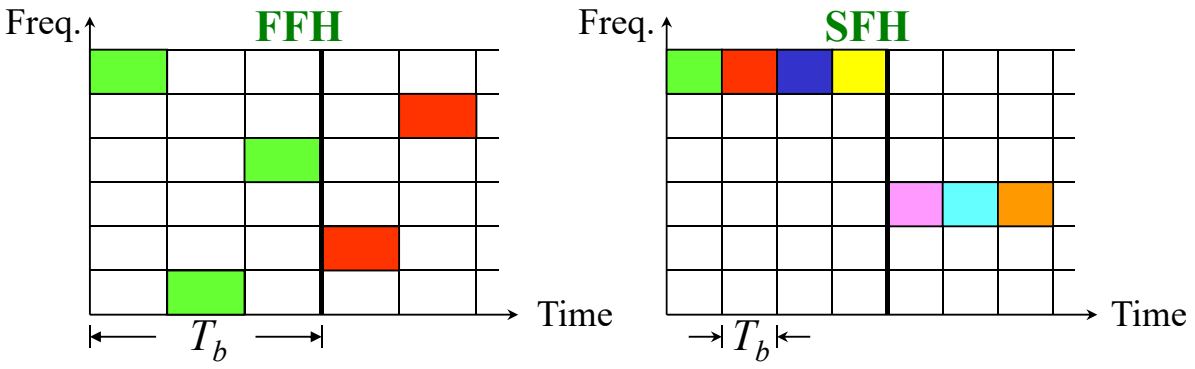

Frequency Hopping Power Spectrum

- At any instant, the transmitted signal is a **narrowband signal**
- This narrowband signal switches the occupation channel in a **pseudorandom** manner
- The processing gain can be approximated as the number of available channels

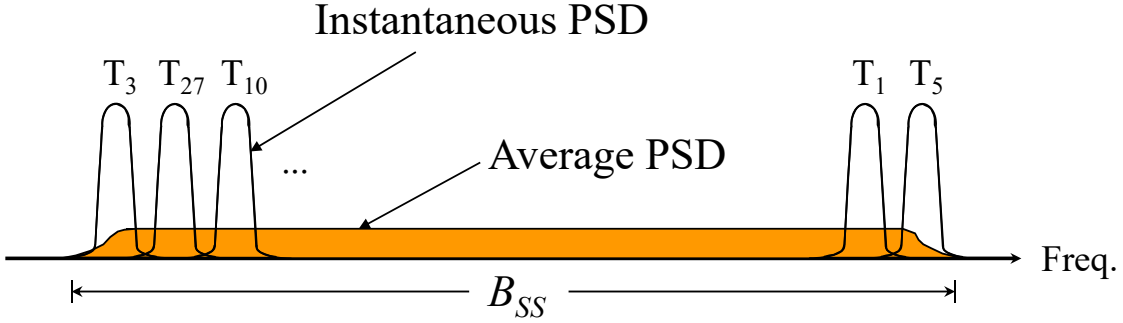

Frequency Hopping Power Spectrum (Cont.)

- Spectrum-analyzer photo of a frequency-hop (FH) spread-spectrum signal.

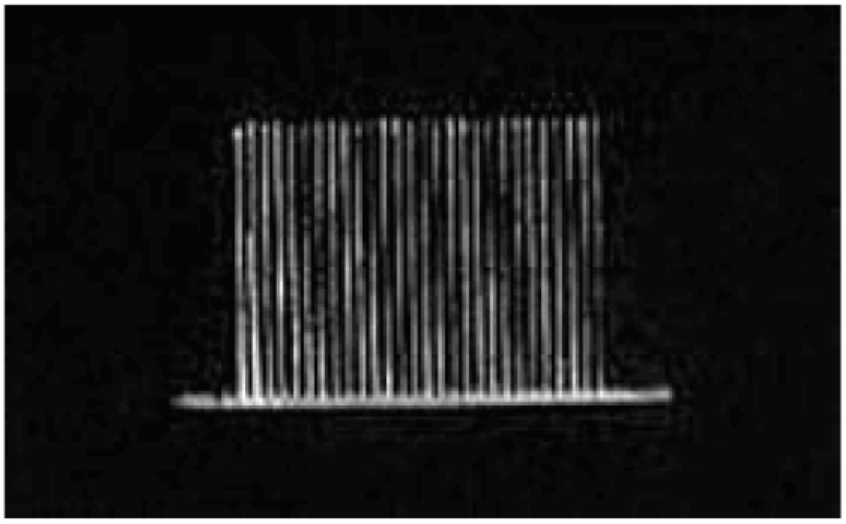

Source: MAXIM

Direct Sequence Spread Spectrum

Direct Sequence Characteristics

- Direct sequence spread spectrum technology is widely used in mobile communications systems
  - cdmaOne (IS-95), cdma2000, W-CDMA and WLANs
  - Spectrum spreading is achieved by directly using a pseudorandom sequence with a rate much higher than that of the input data signal

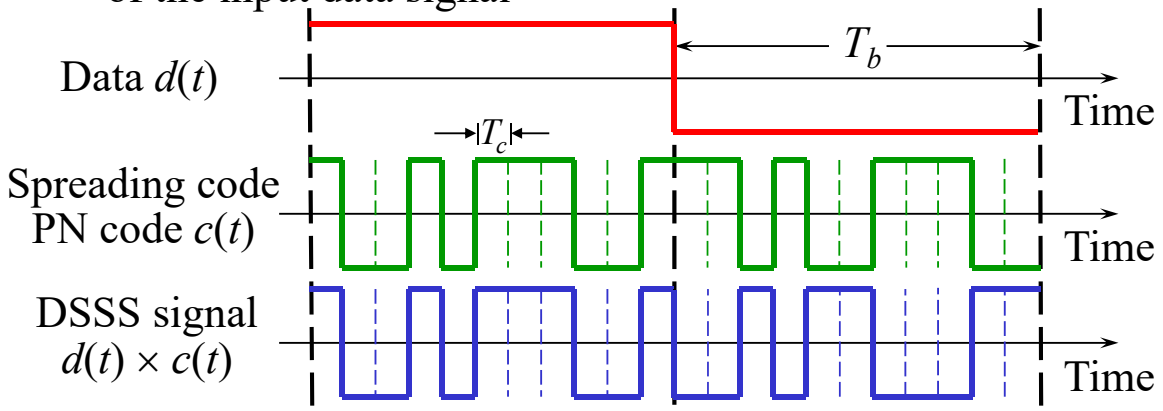

Direct Sequence Generation

- DSSS takes **direct multiplication** to spread the data signal
  - A pseudorandom (PN) code is needed for spreading the input data sequence

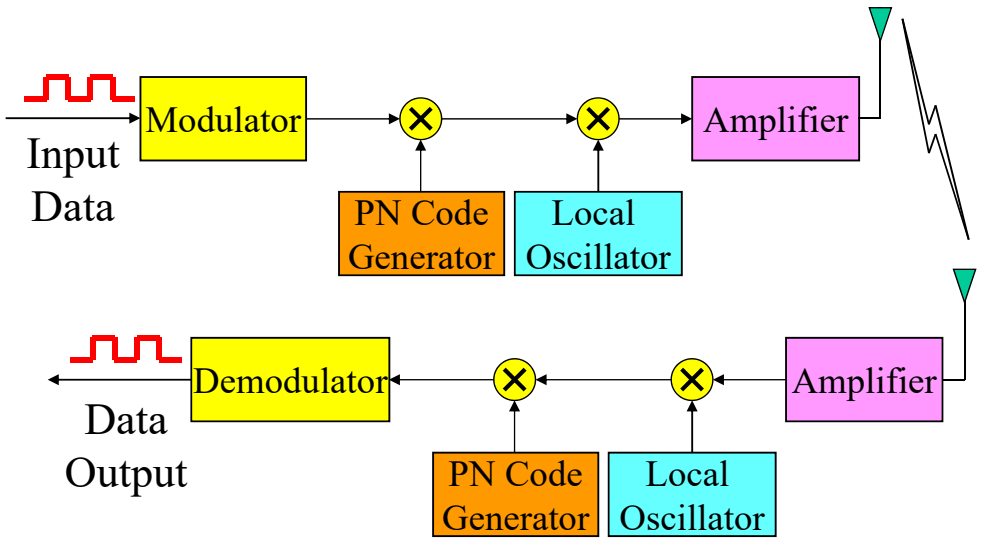

Direct Sequence Power Spectrum

- At any instant, the transmitted signal is a **wideband signal**
- The instantaneous PSD is the same as the average PSD

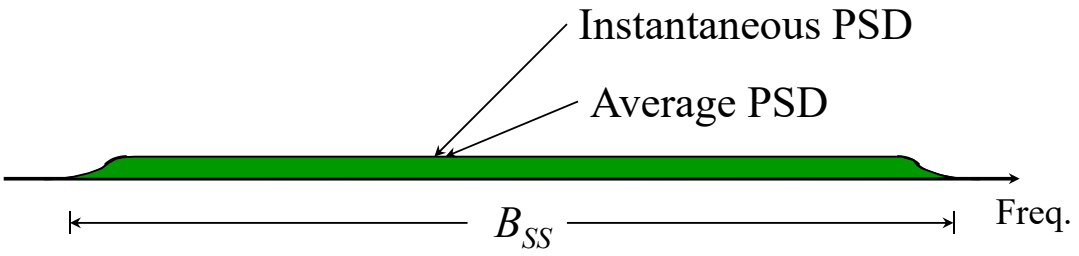

Direct Sequence Power Spectrum (Cont.)

- Spectrum-analyzer photo of a direct-sequence (DS) spread-spectrum signal.

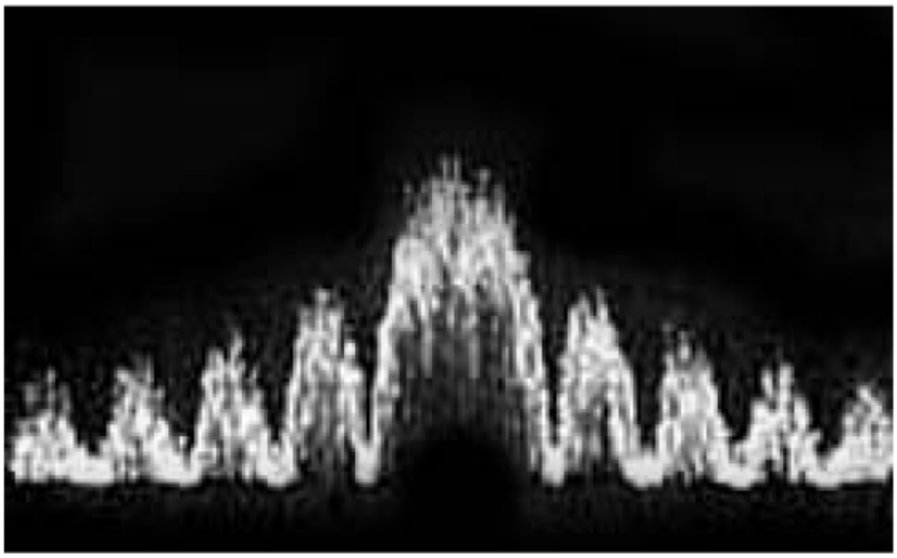

Source: MAXIM

Hybrid Modulations

Hybrid Modulations

- Each of the above techniques possesses certain **advantages** and **disadvantages**
  - The technology selection relies on the system design objectives
- By **combining** more than two spread-spectrum techniques, hybrid modulations may possess more advantages
  - DS-FH
  - DS-TH
  - FH-TH

Comparison of SS Technologies

Comparison of SS Technologies

- Comparing the SS technologies, we consider the following metrics:
  - **Power requirement:** (The transmission range is restricted by power requirement)
    - Maximum power = Average power: Linear FM, FHSS, DSSS
    - Maximum power >> Average power: THSS
  - **Spectrum availability:** (The processing gain is restricted by spectrum availability)
    - Limited to continuous band: Linear FM, THSS, DSSS
    - Can use discontinuous band: FHSS

Comparison of SS Technologies (Cont.)

- **Signaling (time sampling) rate:** (The hardware requirement is proportional to the signaling rate)
  - Proportional to the processing gain: THSS, DSSS
  - A constant: FHSS (depends on the hopping rate)
  - Other: Linear FM (depends on the frequency oscillator)
- **Pseudorandom behavior:** (The anti-jamming and LPI performance relies on the pseudorandom properties)
  - Without pseudorandom behavior: Linear FM
  - With pseudorandom behavior: THSS, FHSS, DSSS
- **Capability of other channel scanning:**
  - Incapable: Linear FM, FHSS, DSSS (continuous Tx/Rx)
  - Capable: THSS (discontinuous Tx/Rx)