展頻通訊
(Spread Spectrum Communications)

國立清華大學電機系暨通訊工程研究所
蔡育仁
台達館 821 室
Tel: 62210
E-mail: yrtsai@ee.nthu.edu.tw

Chapter 2
Spread-Spectrum Systems

Contents

- Pulse-Noise Jamming
- Low Probability of Detection
- BPSK Direct-Sequence Spread Spectrum
- Interference Rejection
- QPSK Direct-Sequence Spread Spectrum
- Frequency-Hop Spread Spectrum
- Bluetooth Wireless Technology
- Hybrid DS/FH Spread Spectrum
- LoRa Chirp Spread Spectrum
- Spread Spectrum Advantages
- ISM Band Regulations

Pulse-Noise Jamming Problem

Pulse-Noise Jamming

- A pulse-noise **jammer** transmits pulses of
  - Band-limited white Gaussian noise
  - Have an average power ***J*** referred to the receiver front-end
- The jammer may choose
  - The **center frequency** and **bandwidth** identical to the signal
  - The pulse duty factor ρ to cause the **maximum degradation** while maintaining a **constant average transmitted power *J***

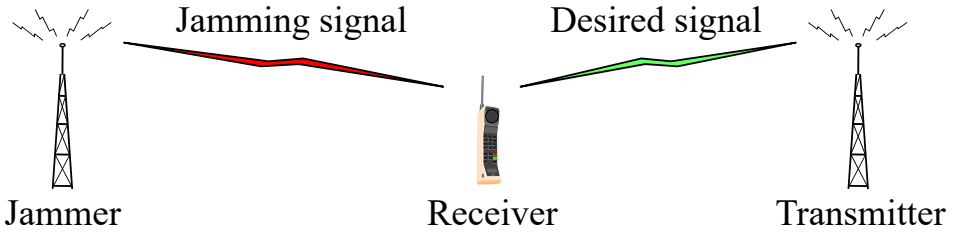

Pulse-Noise Jamming (Cont.)

- How to choose the **optimal** pulse duty factor ρ ?
  - The average jamming power J (power resource) is limited
  - For a **large** (**small**) duty factor ρ, we have
    - Low (High) jammer power spectral density
    - Long (Short) jamming duration
  - If the jammer power spectral density is too low, there will be **no critical damage** to the desired signal

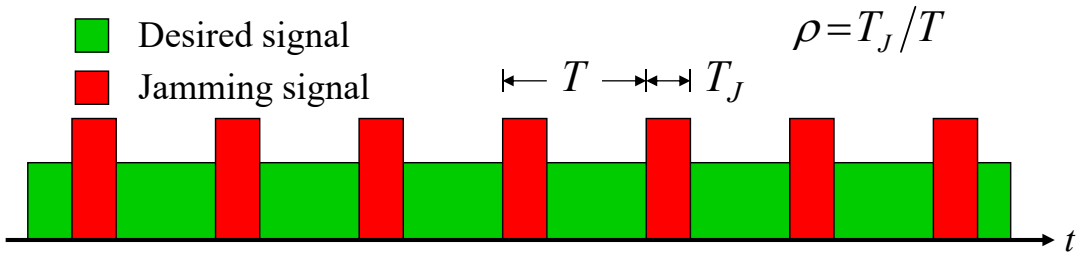

Pulse-Noise Jamming (Cont.)

- Consider a coherent BPSK communication system
  - The bit error probability is

$$P_E = Q\left(\sqrt{\frac{2E_b}{N_0}}\right)$$

  - The jammer increases the receiver noise power spectral density from N_0 to $N_0 + N_J/\rho$, where
    - $N_J = J/W$: the one-sided average jammer power spectral density
    - W: the one-sided transmission bandwidth
- The average bit error probability is

$$\overline{P_E} = (1-\rho)Q\left(\sqrt{\frac{2E_b}{N_0}}\right) + \rho Q\left(\sqrt{\frac{2E_b}{N_0 + N_J/\rho}}\right)$$

Optimal Pulse-Noise Jamming

- The jammer chooses ρ to **maximize** $\overline{P_E}$
- When a system is designed to operate in a jamming environment, the **maximum transmitter power is used**
  - The receiver front-end thermal noise N_0 can be neglected
  - The average bit error probability can be approximated as

$$\overline{P_E} \approx \rho Q\left(\sqrt{\frac{2E_b\rho}{N_J}}\right)$$

- The Q-function can be bounded by an exponential function

$$\overline{P_E} \le \frac{\rho}{\sqrt{4\pi E_b\rho/N_J}} e^{-E_b\rho/N_J}$$

Optimal Pulse-Noise Jamming (Cont.)

- Find ρ that **maximizes** the error probability function
  - $\rho = N_J / 2E_b$

$$\overline{P}_{E,\max} = \frac{1}{\sqrt{2\pi e}} \frac{1}{2E_b / N_J}$$

Let $\overline{P}_E = \dfrac{\rho}{\sqrt{4\pi E_b \rho / N_J}} e^{-E_b \rho / N_J} = \alpha \rho^{1/2} e^{-E_b \rho / N_J}$, $\alpha = \dfrac{1}{\sqrt{4\pi E_b / N_J}}$

$$\frac{d\overline{P}_E}{d\rho} = \alpha \left[\frac{1}{2} \rho^{-1/2} - \frac{E_b}{N_J} \rho^{1/2} \right] e^{-E_b \rho / N_J}$$

$$\alpha \left[\frac{1}{2} \rho^{-1/2} - \frac{E_b}{N_J} \rho^{1/2} \right] e^{-E_b \rho / N_J} = 0$$

$$\Rightarrow \rho = \frac{N_J}{2E_b}$$

Pulse-Noise Jamming Performance

- The **exponential** dependence of bit error probability on the signal-to-noise ratio has been replaced by an **inverse linear** relationship
- The **optimized** pulse noise jammer causes a degradation of approximately **31.5 dB** relative to **continuous jamming** at a bit error probability of $\mathbf{10^{-5}}$
- The severe degradation can be largely eliminated by using a combination of **spread-spectrum** techniques and **forward error correction coding** (including the interleaving technique)
- In order to cause maximum degradation, the jammer must **know** the value of E_b/N_J at the receiver
  - It is very difficult, so that the result is a **worst-case** scenario

Pulse-Noise Jamming Performance (Cont.)

- **A**: worst-case pulse-noise jamming
- **B**: continuous-noise jamming
- Without applying SS, it is highly possible that the system operates in an environment with a very low E_b/N_J.

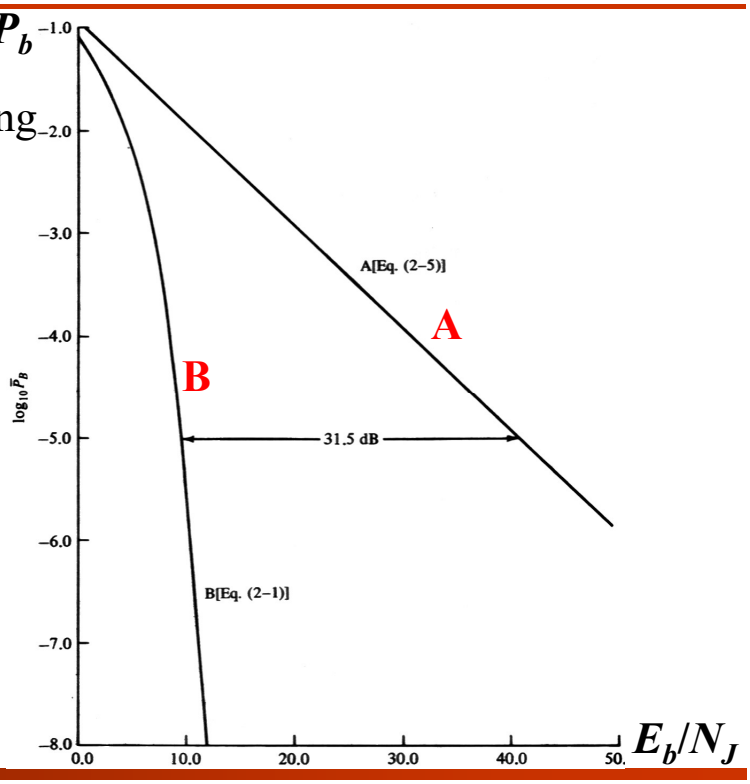

Pulse-Noise Jamming Performance (Cont.)

- Without diversity and channel coding

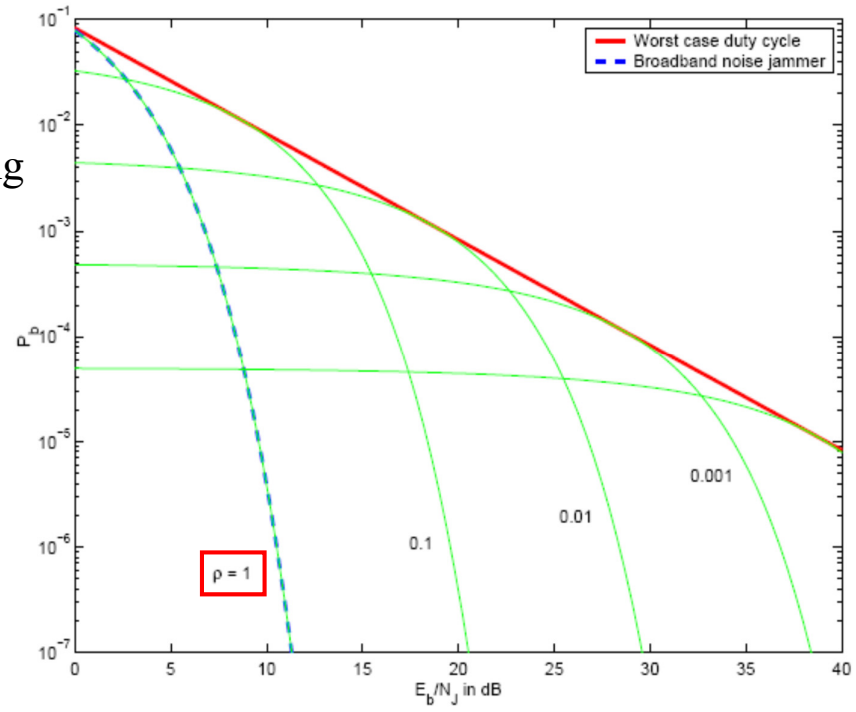

Source: E. Strom, T. Ottosson, and A. Svensson, CHALMERS University of Technology

Other Jamming Scenarios

- **Full-band jamming:** If the jammer has the capability to jam the **entire band** with a **strong** jamming power density
  - The desired signal will be completely corrupted.
  - The jammer must have **extraordinary high** power resource.
  - **Shannon limit** is the lower bound of successful reception.
- **Saturation jamming:** If the jammer can generate a strong jamming signal to overwhelms the receiver
  - For example, by using the **beamforming technique** (the **receiver location** must be available)
  - The receiver's **front-end** will be **saturated** and become desensitized without the ability to receive the desired signal.
  - A **denial-of-service** effect rather than just adding noise.

Low Probability of Detection

Low Probability of Detection

- **Low-probability-of-detection** (LPD) communication systems are designed to make their detection **as difficult as possible** by **anyone** but the intended receiver
  - The **minimum** **signal power** required to achieved a particular receiving performance is used
  - **Spread spectrum** techniques can significantly aid in achieving this goal
- Assume that the detector is using a **radiometer** which detects signal energy received in a bandwidth W
  - Filtering this bandwidth
  - Squaring the output of this filter (Taking the signal power)
  - Integrating the output of the squarer for a time duration T

Low Probability of Detection (Cont.)

  - Comparing the output with a **predetermined threshold**
    - Above the threshold: the signal is **present**
    - Otherwise: the signal is **absent**

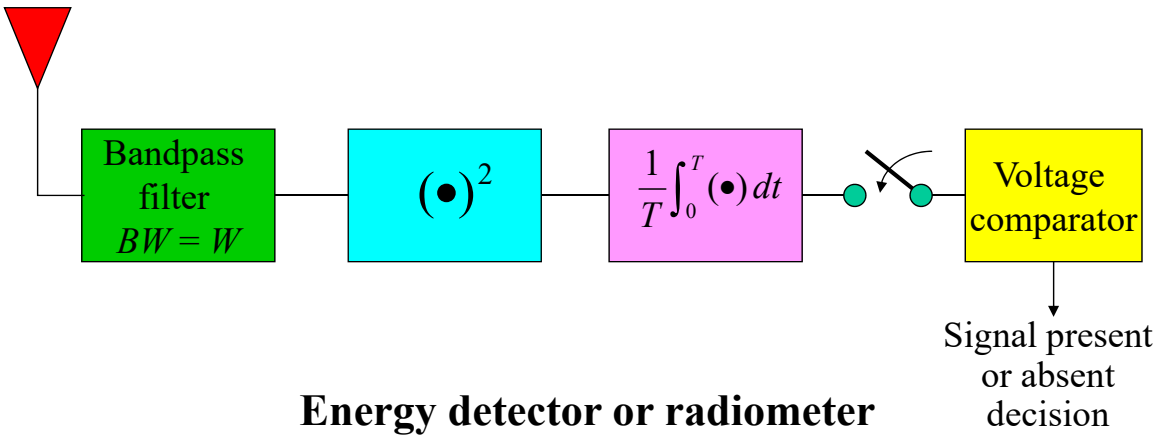

Energy detector or radiometer

Low Probability of Detection (Cont.)

- The probability of detecting the signal if it is **indeed present**: P_d (depending on the desired signal and noise)
- The probability of falsely declaring a detection when **noise alone** is present: P_{fa} (depending only on noise)
- The probability of detecting the signal:

$$P_d = \Phi\left\{\left[\frac{P}{N_0}\sqrt{\frac{T}{W}} - \Phi^{-1}(1-P_{fa})\right]\right\}$$

  - where

$$\Phi(y) = \frac{1}{\sqrt{2\pi}}\int_{-\infty}^{y}\exp\left(-\frac{1}{2}\zeta^2\right)d\zeta$$

Low Probability of Detection (Cont.)

- For a fixed P_{fa}, the probability of detection can be made smaller by:
  - **Reducing P/N_0**, or
    - However, this will degrade the receiving performance
  - **Increasing W**
    - Reduce the detecting probability for a **fixed SNR**
- W can be increased by using spread-spectrum techniques

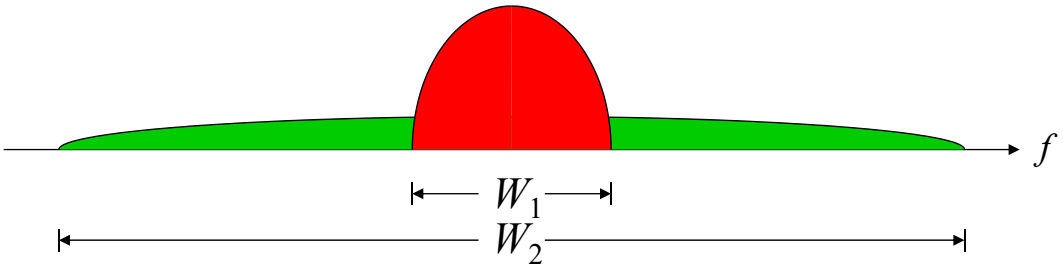

BPSK Direct-Sequence Spread Spectrum

Direct-Sequence Spread Spectrum (DSSS)

- Direct-sequence spread spectrum (DSSS): Bandwidth spreading is accomplished by **direct modulation** of a data-modulated carrier by **a wideband spreading signal** (or a spreading code)
- The spreading signal is chosen to have some properties:
  - For the **intended** receiver
    - It facilitates the demodulation
  - For other **unintended** receivers
    - The demodulation is as difficult as possible

BPSK DSSS

- The simplest form of DSSS employs **binary phase-shift keying** (BPSK) as the spreading modulation
- Consider a constant-envelope data-modulated carrier having the power P, the radian frequency ω_0, and the data modulation phase $\theta_d(t)$

$$s_d(t) = \sqrt{2P}\cos[\omega_0 t + \theta_d(t)]$$

- A signal occupies a bandwidth typically between
  - one-half and twice (1.5 ~ 2) the data rate prior to DS spreading

BPSK DSSS – Transmitter

- BPSK spreading is accomplished by multiplying $s_d(t)$ by a function $c(t)$, which represents the spreading waveform

$$s_t(t) = \sqrt{2P}c(t)\cos[\omega_0 t + \theta_d(t)]$$

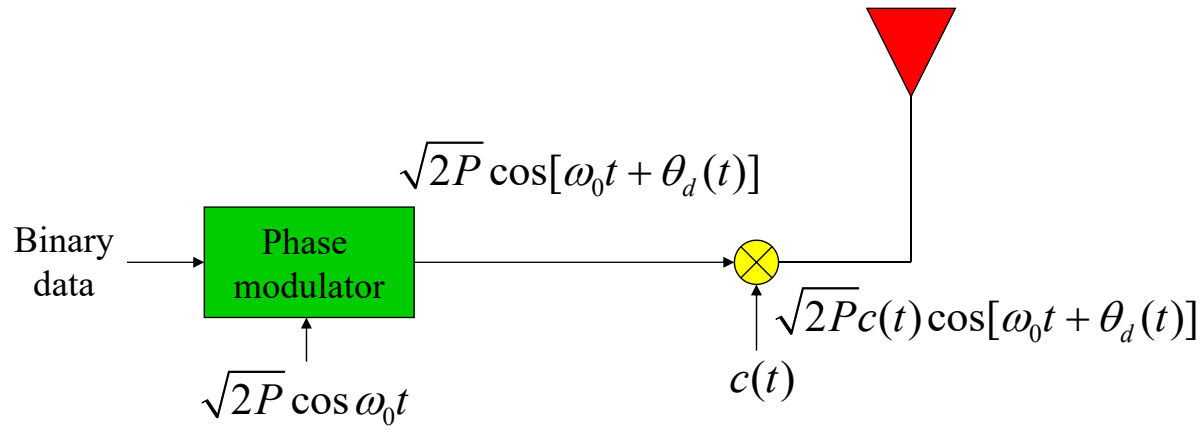

BPSK direct-sequence spread-spectrum transmitter

BPSK DSSS – Receiver

- Assume that the signal is transmitted via a distortionless channel with a transmission delay T_d
- **Demodulation** is accomplished in part by **re-modulating** the received signal with the spreading code appropriately delayed
  - This is called despreading process

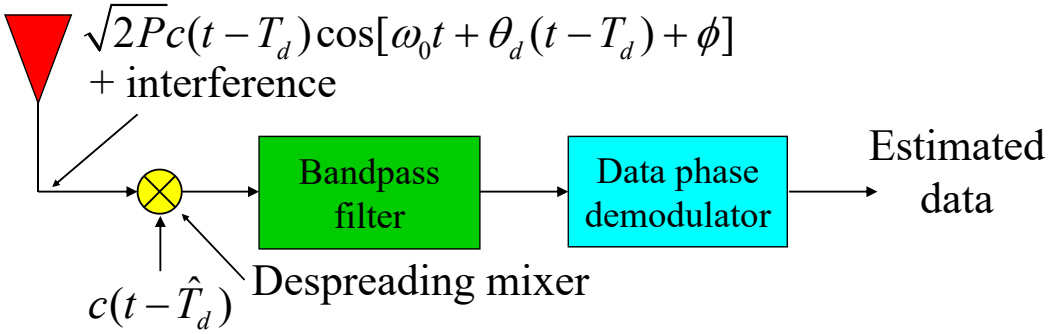

BPSK direct-sequence spread-spectrum receiver

BPSK DSSS – Receiver (Cont.)

- The signal component of the output of the despreading mixer is

$$s_{ds}(t)=\sqrt{2P}c\left(t-T_d\right)c\left(t-\hat{T}_d\right)\cos\left[\omega_0 t+\theta_d(t-T_d)+\phi\right]$$

  - $\hat{T}_d$ is the receiver's best estimate of the transmission delay
  - $c(t)=\pm 1$
    - If $\hat{T}_d=T_d$, $c(t-T_d)\times c(t-\hat{T}_d)=1$
- When **correctly synchronized**, the output is equal to $s_d(t)$ except for a random phase ϕ, and $s_d(t)$ can be demodulated

$$s_{ds}(t)=\sqrt{2P}\cos\left[\omega_0 t+\theta_d(t-T_d)+\phi\right]$$

BPSK DSSS – Receiver (Cont.)

- There is **no restriction** on the form of $\theta_d(t)$, the data modulation **does not** also have to be BPSK
- If BPSK is used for both data modulation and spreading modulation
  - $d(t) = \pm 1$

$$s_d(t) = \sqrt{2P}\,d(t)\cos\omega_0 t$$

$$s_t(t) = \sqrt{2P}\,d(t)c(t)\cos\omega_0 t$$

BPSK DSSS (Cont.)

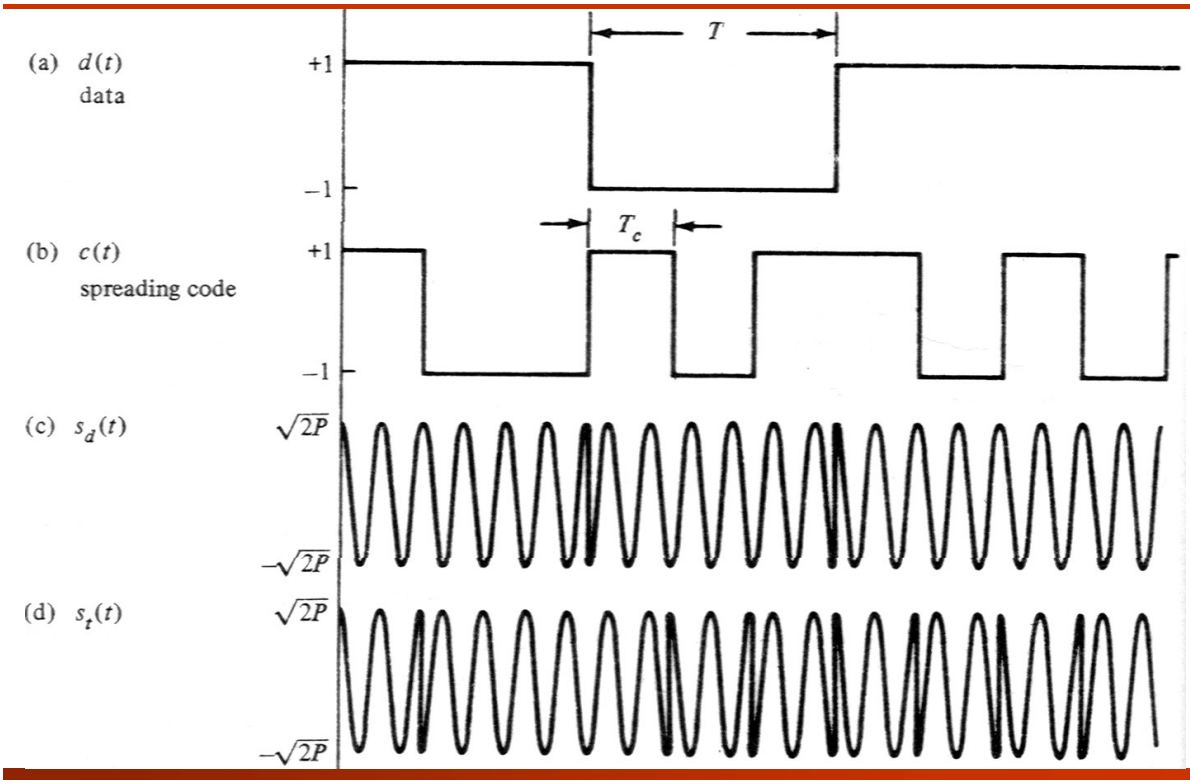

BPSK DSSS (Cont.)

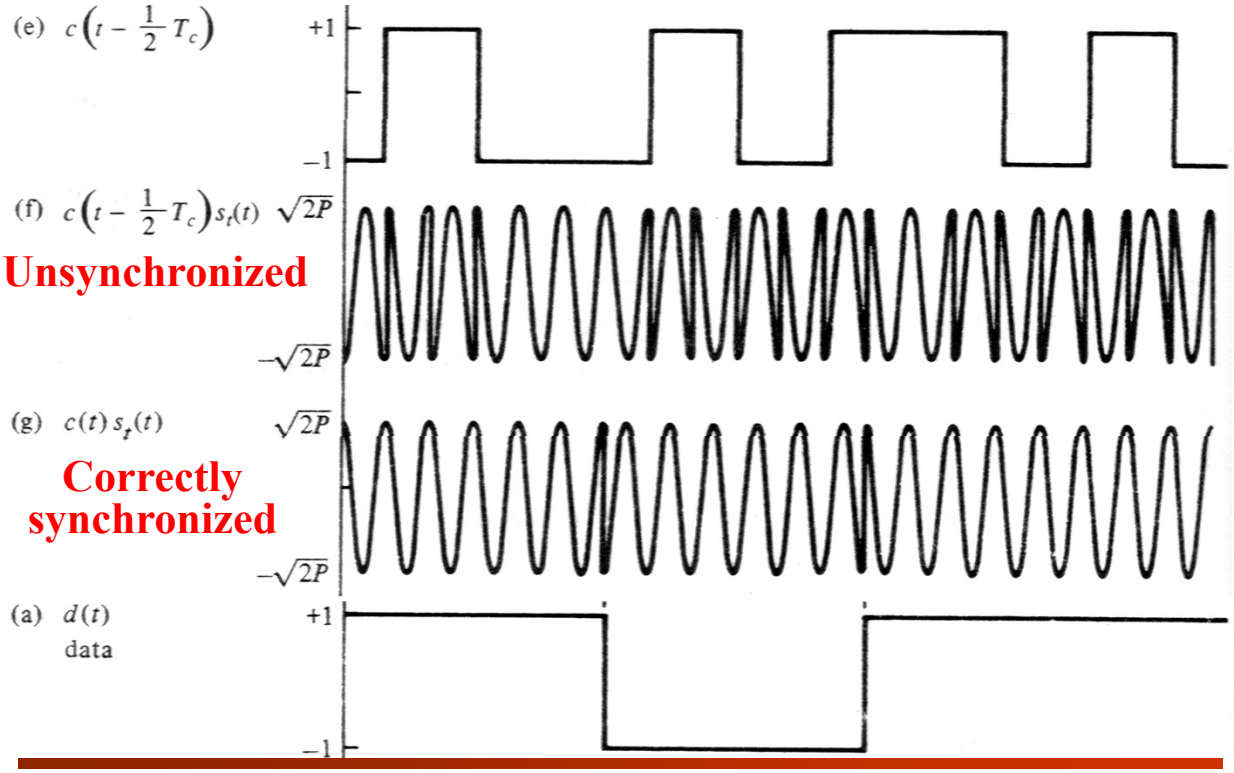

Example

‘0’ → + 1; ‘1’ → – 1
0 + 0 = 0; 0 + 1 = 1; 1 + 0 = 1; 1 + 1 = 0;

Input Data $d(t)$	**1**	**0**	**1**	**1**	**0**
Spreading Code $c(t)$	1001011	1001011	1001011	1001011	1001011
DSSS Signal $s_t(t)$	0110100	1001011	0110100	0110100	1001011
	Channel				
Received $s_r(t)$	0110100	1001011	0110100	0110100	1001011
Despreading Code $c(t)$	1001011	1001011	1001011	1001011	1001011
Signal After Despreading	1111111	0000000	1111111	1111111	0000000
Estimated Data $d'(t)$	**1**	**0**	**1**	**1**	**0**

Power Spectral Density of DSSS

- Assume that both the data modulation and spreading modulation are binary phase-shift keying
- Consider the power spectra of the signals:
  - The two-sided power spectral density of a BPSK carrier $s_d(t)$ with data symbol duration ***T*** is

$$S_d(f) = \frac{1}{2}PT\left\{\text{sinc}^2\left[(f-f_0)T\right] + \text{sinc}^2\left[(f+f_0)T\right]\right\}$$

  - The two-sided power spectral density of DSSS signal $s_t(t)$
    - It is also a binary phase-shift-keyed carrier with spreading code symbol duration T_c ($T \rightarrow T_c$)
    - T_c is often referred to as a spreading code **chip duration**

$$S_t(f) = \frac{1}{2}PT_c\left\{\text{sinc}^2\left[(f-f_0)T_c\right] + \text{sinc}^2\left[(f+f_0)T_c\right]\right\}$$

Power Spectral Density of DSSS (Cont.)

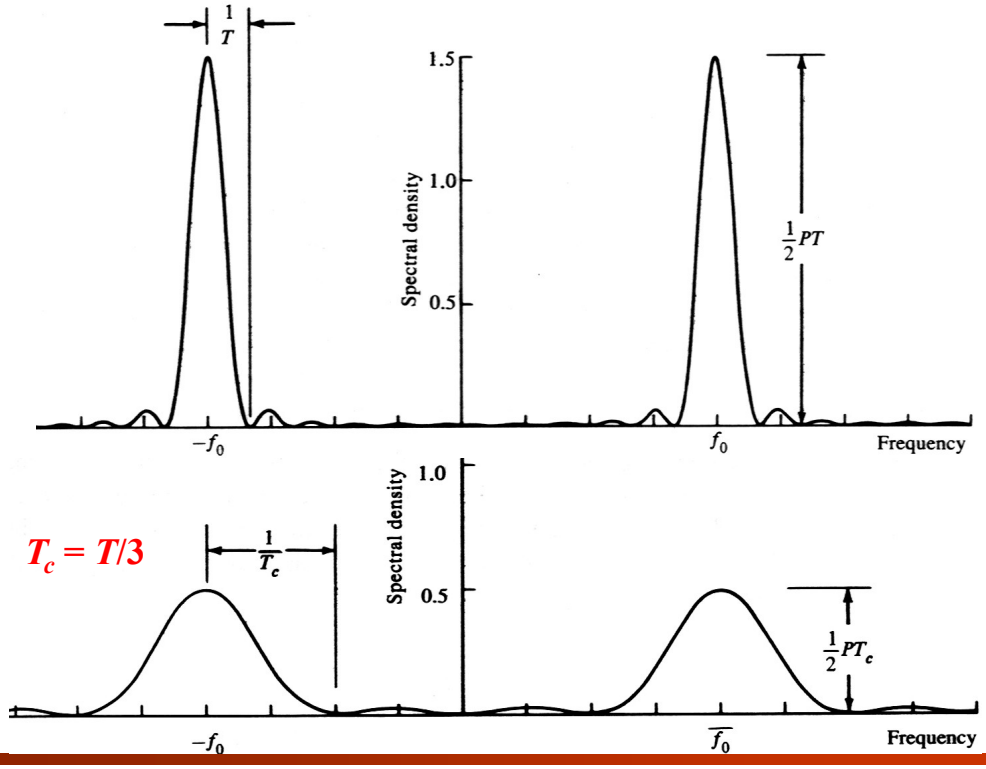

Power Spectral Density of DSSS (Cont.)

- The effect of the modulation by a spreading code is to
  - To spread the bandwidth of the transmitted signal by a factor of N $\quad N = T/T_c$
  - To reduce the level of the PSD by a factor of N
- If the data modulation is an arbitrary **constant-envelope** phase modulation
  - The power spectral density and the **autocorrelation** function of a signal are a **Fourier transform pair**
- Because the signal $s_d(t)$ is independent of $c(t)$:

$$R_t(\tau) = R_d(\tau)R_c(\tau)$$

- The Fourier transform pair of $R_t(t)$ is

$$S_t(f) = \int_{-\infty}^{\infty} S_d(f')S_c(f-f')\,df'$$

Autocorrelation & Power Spectrum of $c(t)$

- The autocorrelation function of spreading code $c(t)$:

$$R_c(\tau) = \lim_{A\to\infty} \frac{1}{2A}\int_{-A}^{A} c(t')c(t'-\tau)\,dt'$$

  - For $\tau = 0$: the integral is equal to **1.0** since $c^2(t) = 1.0$
  - For $\tau \geq T_c$: the integral is **zero** if the code is an infinite sequence of independent random binary digits
  - For $0 < \tau < T_c$:

$$R_c(\tau) = \begin{cases} 1 - \dfrac{|\tau|}{T_c}, & |\tau| < T_c \\ 0, & |\tau| \geq T_c \end{cases}$$

- The Fourier transform of this **triangular waveform** $R_c(\tau)$ is

$$S_c(f) = T_c\,\mathrm{sinc}^2(fT_c)$$

Autocorrelation & Power Spectrum of $c(t)$ (Cont.)

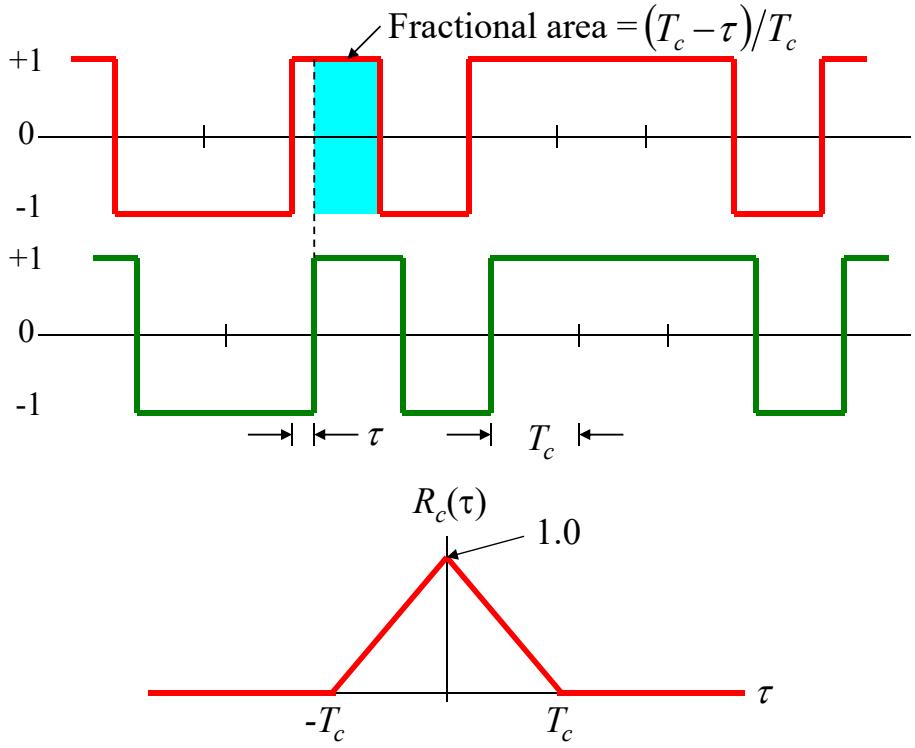

Power Spectral Density of $s_t(t)$

- Assume that the spreading code chip rate is **100** times the data rate

$$S_c(f) = T_c \,\mathrm{sinc}^2(fT_c) = \frac{T}{100}\mathrm{sinc}^2(fT/100)$$

$$S_t(f) = \int_{-\infty}^{\infty} \frac{1}{2} PT \,\mathrm{sinc}^2\left[(f' - f_0)T\right] \times \frac{T}{100}\mathrm{sinc}^2\left[(f - f')T/100\right] df'$$

$$+ \int_{-\infty}^{\infty} \frac{1}{2} PT \,\mathrm{sinc}^2\left[(f' + f_0)T\right] \times \frac{T}{100}\mathrm{sinc}^2\left[(f - f')T/100\right] df'$$

- Because the spreading chip is much larger than the data rate
  - The **second sinc** function in each integral is approximately **constant** over the range of significant values of the **first sinc** function (i.e., around $f' = f_0$ and $f' = -f_0$)
  - $\mathrm{sinc}^2[(f \pm f')T/100] \approx \mathrm{sinc}^2[(f \pm f_0)T/100]$ for all f'

Power Spectral Density of $s_t(t)$ (Cont.)

$$S_t(f) \cong \frac{PT^2}{200}\text{sinc}^2\left[(f-f_0)T/100\right]\int_{-\infty}^{\infty}\text{sinc}^2\left[f'-f_0)T\right]df'$$

$$+\frac{PT^2}{200}\text{sinc}^2\left[(f+f_0)T/100\right]\int_{-\infty}^{\infty}\text{sinc}^2\left[f'+f_0)T\right]df'$$

$$=\frac{PT}{200}\left\{\text{sinc}^2\left[(f-f_0)T/100\right]+\text{sinc}^2\left[(f+f_0)T/100\right]\right\}$$

$\text{sinc}^2\left[(f+f_0)T\right]$ $\text{sinc}^2(fT/100)$ $\text{sinc}^2\left[(f-f_0)T\right]$

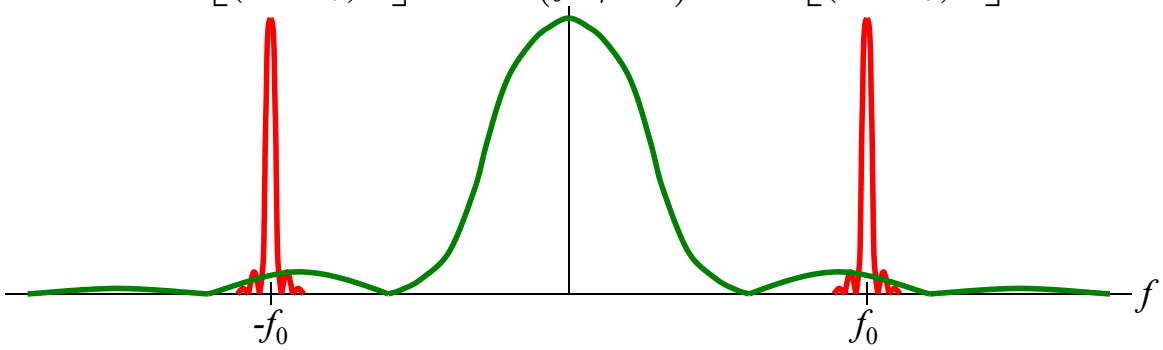

Interference Rejection

Interference Rejection

- The interference rejection is accomplished by the receiver **despreading mixer**:
  - **Despread** the desired signal
  - **Spread** the interference signal
- If the interference energy is spread over a bandwidth much larger than the data bandwidth, most of the energy will be **rejected** by a band-pass filter before data demodulation
  - The bandwidth of the band-pass filter is equal to the **information rate** (data bandwidth, not spread bandwidth)

Interference Rejection – Before Despreading

- Suppose that the BPSK is used for both data modulation and spreading modulation, and the interference is a **single tone** having power J
  - If no spectrum spreading is employed
    - The ratio of jamming power to signal power is J/P
- If DSSS is employed, the power spectrum of the **received signal** is:

$$S_r(f) \cong \frac{1}{2} PT_c \left\{ \text{sinc}^2 \left[(f - f_0) T_c \right] + \text{sinc}^2 \left[(f + f_0) T_c \right] \right\} + \frac{1}{2} J \left\{ \delta(f - f_0) + \delta(f + f_0) \right\}$$

- The received signal is:

$$r(t) = \sqrt{2P} d(t - T_d) c(t - T_d) \cos(\omega_0 t + \phi) + \sqrt{2J} \cos(\omega_0 t + \phi')$$

Interference Rejection – After Despreading

- The output of the despreading mixer is: (when multiplied by a well **synchronized** despreading code)

$$y(t) = \sqrt{2P}\,d(t - T_d)\cos(\omega_0 t + \phi) + \sqrt{2J}\,c(t - T_d)\cos(\omega_0 t + \phi')$$

Narrow band **Wide band**

- The power spectrum of the output of despreading mixer is:

$$S_y(f) = \frac{1}{2}PT\left\{\text{sinc}^2\left[(f - f_0)T\right] + \text{sinc}^2\left[(f + f_0)T\right]\right\}$$ **Desired signal**

$$+\frac{1}{2}JT_c\left\{\text{sinc}^2\left[(f - f_0)T_c\right] + \text{sinc}^2\left[(f + f_0)T_c\right]\right\}$$ **Jamming signal**

- The data signal has been **despread** **to the data bandwidth**
- The single-tone jammer has been **spread** **over the full transmission bandwidth** of the spread-spectrum system

Interference Rejection–After Despreading (Cont.)

- After despreading, the output is filtered to limit the bandwidth at the input of the data demodulator
  - Nearly all of the signal power is **passed** by the IF (intermediate-frequency) band-pass filter
  - A large fraction of the spread jammer power is **rejected** by the IF filter

Interference Rejection–After Despreading (Cont.)

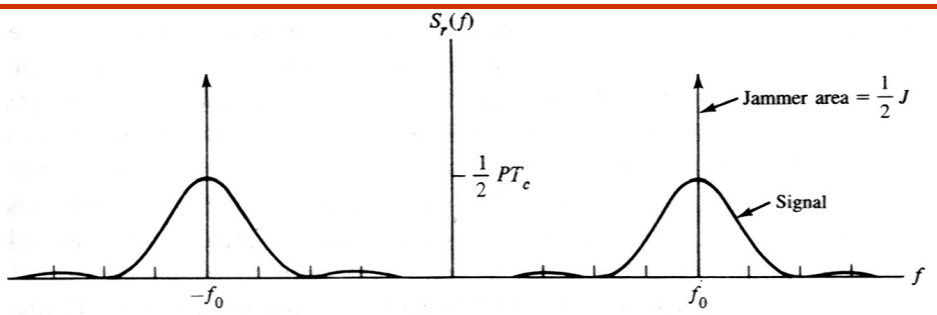

(a) Before despreading

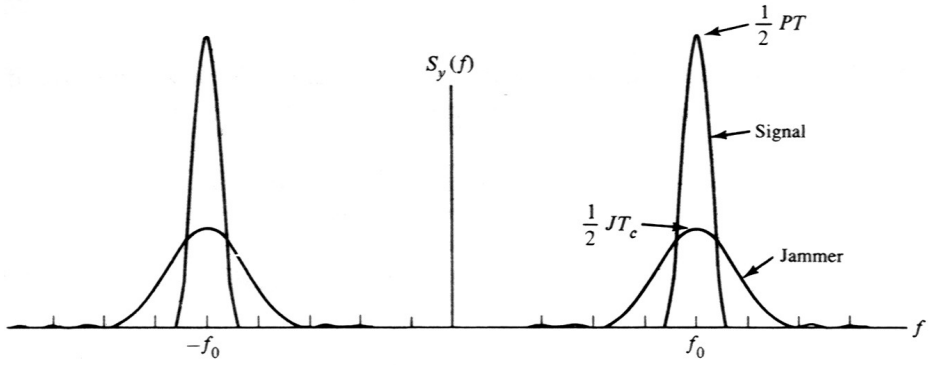

(b) After despreading

Interference Rejection–After Despreading (Cont.)

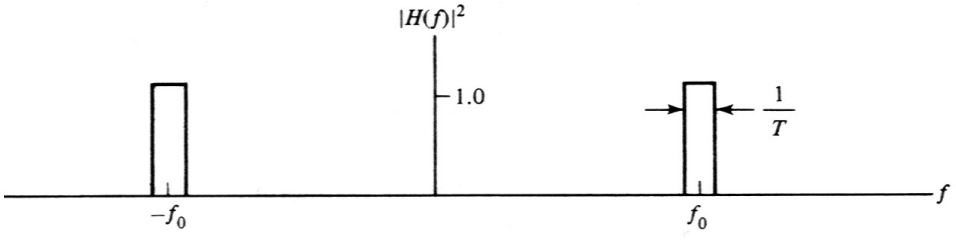

(c) IF filter power transfer function

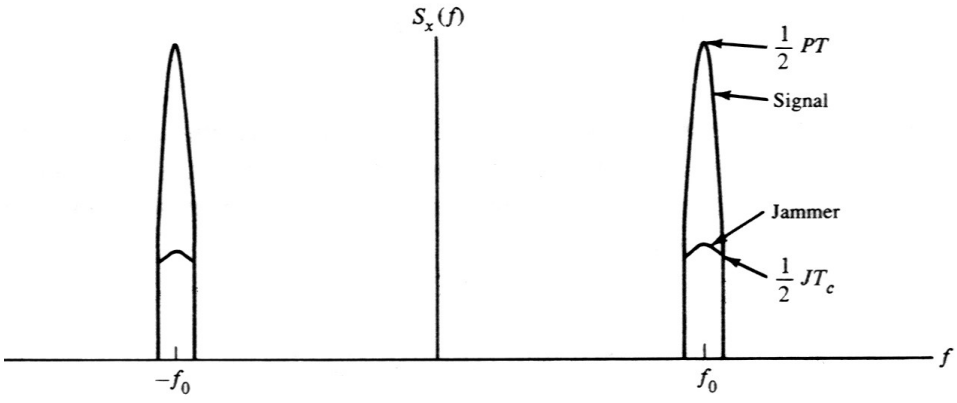

(d) Output of IF filter

Interference Rejection – Jammer Power

- The magnitude of the jammer power passed by the IF filter is

$$J_0 = \int_{-\infty}^{\infty} S_J(f)\left|H(f)\right|^2 df$$

  - $S_J(f)$ is the power spectrum of the jammer after the despreading mixer
- For an **ideal** band-pass IF filter, the jammer power is

$$\begin{aligned} J_0 &= \int_{-f_0-1/2T}^{-f_0+1/2T} S_J(f)df + \int_{f_0-1/2T}^{f_0+1/2T} S_J(f)\,df \\ &\cong \frac{1}{2}JT_c\int_{-f_0-1/2T}^{-f_0+1/2T} \text{sinc}^2\left[(f+f_0)T_c\right]df \\ &\quad + \frac{1}{2}JT_c\int_{f_0-1/2T}^{f_0+1/2T} \text{sinc}^2\left[(f-f_0)T_c\right]df \end{aligned}$$

Interference Rejection – Jammer Power (Cont.)

- For a large ratio of the total spread bandwidth to the data bandwidth **(i.e. $T_c << T$)**, **sinc** function is nearly **constant** over the range of integration
  - The constant is equal to 1

$$J_0 \cong J\frac{T_c}{T}$$

- Thus the jamming power at the input to the data demodulator has been **reduced** by a factor of
  - **Processing gain (PG)**

$$G_P = \frac{T}{T_c}$$

Interference Rejection – Wideband Jammer

- How about using a **wideband** jamming signal?

$$J(t) = \sqrt{2J}c'\left(t - T_d'\right)\cos\left(\omega_0 t + \phi'\right)$$

- The key is "Will the jamming signal be **despread** by the despreading mixer at the desired receiver?"

QPSK Direct-Sequence Spread Spectrum

QPSK DSSS – Balanced QPSK

- One type of the QPSK spreading modulation is **balanced QPSK DSSS**

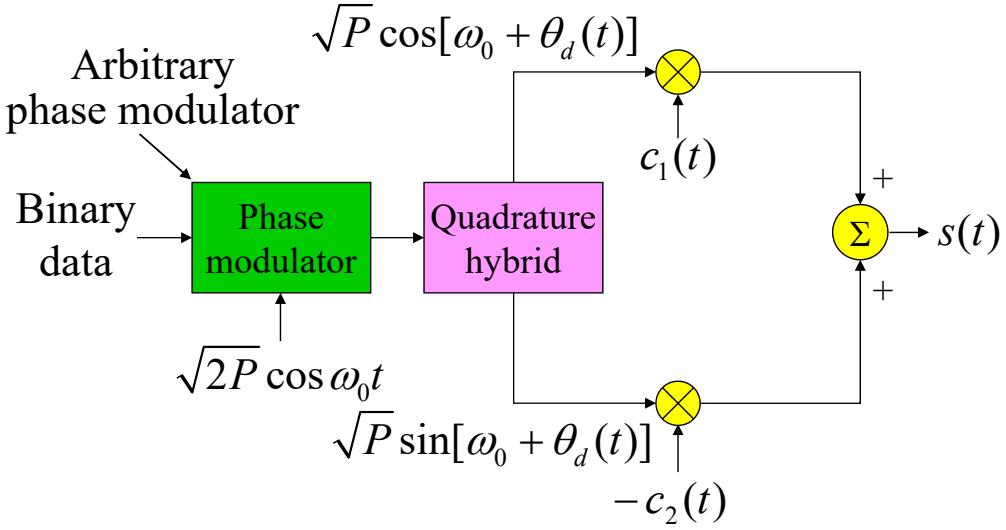

QPSK SS modulator with arbitrary data phase modulation

QPSK DSSS – Balanced QPSK (Cont.)

- The output of the QPSK modulator is

$$s(t)=\sqrt{P}c_1(t)\cos\left[\omega_0 t+\theta_d(t)\right]-\sqrt{P}c_2(t)\sin\left[\omega_0 t+\theta_d(t)\right]\triangleq a(t)-b(t)$$

  - $c_1(t)$: the **in-phase** spreading waveform
  - $c_2(t)$: the **quadrature** spreading waveform
  - $c_1(t)$ and $c_2(t)$ are assumed to be **chip synchronous** but **independent** of one another

- The autocorrelation function of $s(t)$:

$$\begin{aligned}R_s&=E\left[s(t)s(t+\tau)\right]\\&=E\left[a(t)a(t+\tau)\right]+E\left[b(t)b(t+\tau)\right]-E\left[a(t)b(t+\tau)\right]-E\left[b(t)a(t+\tau)\right]\\&=R_a(\tau)+R_b(\tau)-E\left[a(t)b(t+\tau)\right]-E\left[b(t)a(t+\tau)\right]\end{aligned}$$

- If $c_1(t)$ and $c_2(t)$ are **independent** of one another

$$R_s=R_a(\tau)+R_b(\tau)$$

QPSK DSSS – Balanced QPSK (Cont.)

- The QPSK **despreading** receiver for balanced QPSK DSSS

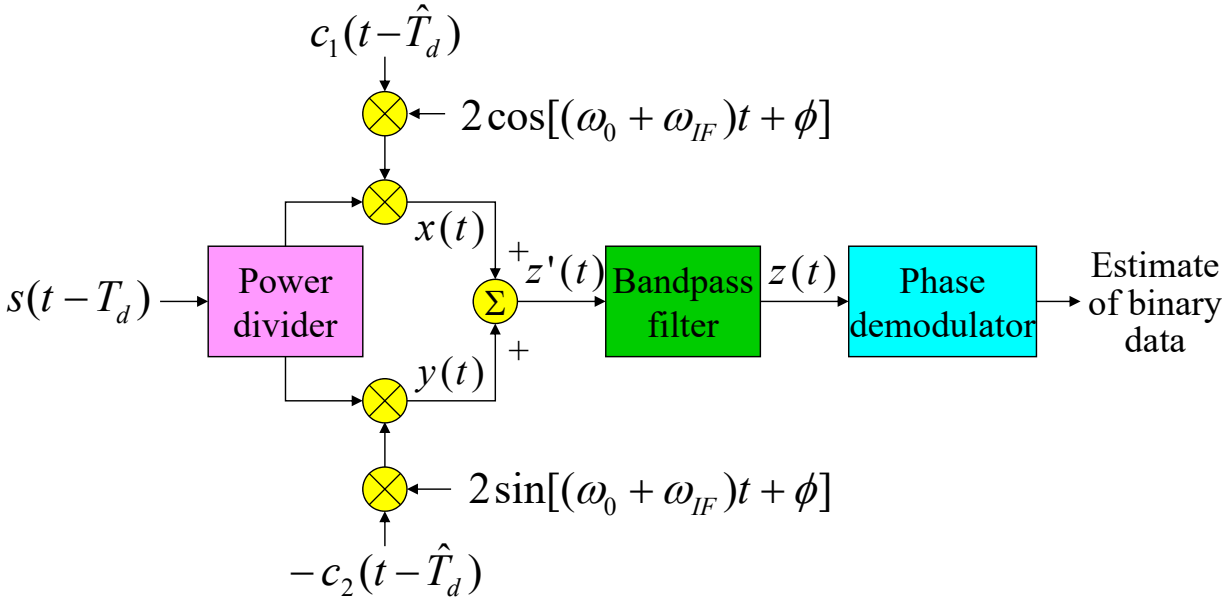

QPSK SS receiver for arbitrary data modulation

QPSK DSSS – Balanced QPSK (Cont.)

- The despreading mixer output is

$$x(t)=\sqrt{\frac{p}{2}}c_1(t-T_d)c_1(t-\hat{T}_d)\cos[\omega_{IF}t-\theta_d(t)]$$

$$+\sqrt{\frac{p}{2}}c_2(t-T_d)c_1(t-\hat{T}_d)\sin[\omega_{IF}t-\theta_d(t)]$$

$$y(t)=-\sqrt{\frac{p}{2}}c_1(t-T_d)c_2(t-\hat{T}_d)\sin[\omega_{IF}t-\theta_d(t)]$$

Cancelled

$$+\sqrt{\frac{p}{2}}c_2(t-T_d)c_2(t-\hat{T}_d)\cos[\omega_{IF}t-\theta_d(t)]$$

- If the despreading codes are well **synchronized**:

$$c_1(t-T_d)c_1(t-\hat{T}_d)=c_2(t-T_d)c_2(t-\hat{T}_d)=1.0$$

QPSK DSSS – Balanced QPSK (Cont.)

- The desired signal has been despread

$$z(t) = \sqrt{2P}\cos\left[\omega_{IF}t - \theta_d(t)\right]$$

- The data-modulated carrier has been **recovered**
- The signal $z(t)$ is the input to a conventional phase demodulator
  - The data can then be recovered

QPSK DSSS – Dual-channel QPSK

- Another type of the QPSK spreading modulation is **dual-channel QPSK**
  - The in-phase and quadrature QPSK channels are BPSK data modulated using **different BPSK data modulators**
- The output of the QPSK modulator is

$$s(t) = \sqrt{P}d_1(t)c_1(t)\cos\omega_0 t - \sqrt{P}d_2(t)c_2(t)\sin\omega_0 t$$

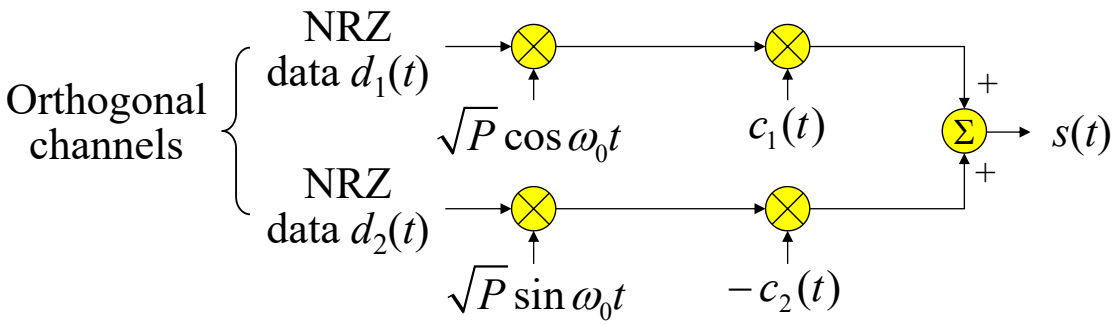

Dual-channel QPSK DSSS Transmitter

QPSK DSSS – Dual-channel QPSK (Cont.)

- The QPSK despreading receiver for dual-channel QPSK DSSS
  - If it permits the in-phase and quadrature channels to have **unequal** power, the output signal is

$$s(t) = \sqrt{2P_I}\, d_1(t)c_1(t)\cos\omega_0 t - \sqrt{2P_Q}\, d_2(t)c_2(t)\sin\omega_0 t$$

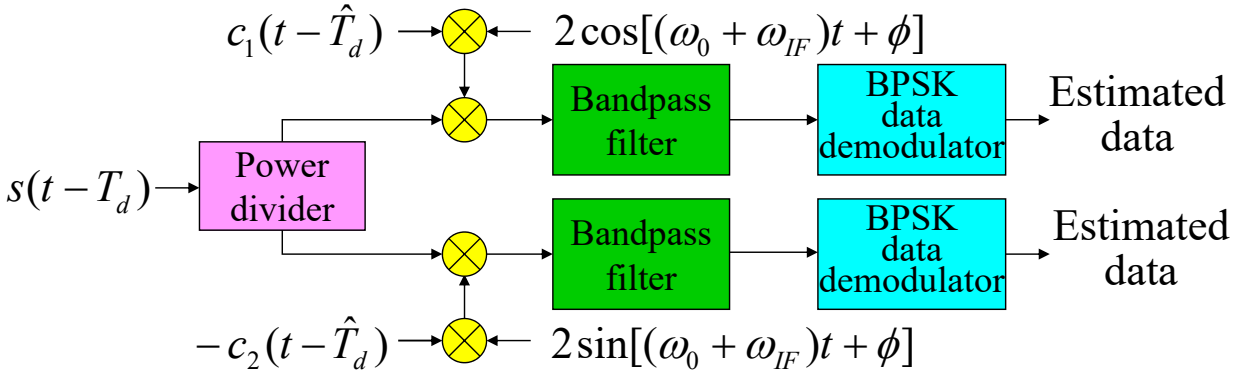

Dual-channel QPSK DSSS receiver

Frequency-Hop Spread Spectrum

Frequency-Hop Spread Spectrum

- Frequency-hop spread spectrum technique is to change the frequency of the carrier **periodically**
- The transmitted signal appears as a data-modulated carrier which is hopping from one frequency to the next
- Typically, each carrier frequency is selected from a set of $\mathbf{2^k}$ frequencies which are spaced approximately the width of the **data modulation bandwidth** apart
- The spreading code **does not** directly modulate the data-modulated carrier but is used to **control the sequence of carrier frequencies**
- At the receiver, the frequency hopping is removed by mixing with a local oscillator signal which is hopping **synchronously** with the received signal

FHSS – Transmitter

- The frequency synthesizer output is a sequence of tones of duration T_c (hop duration)

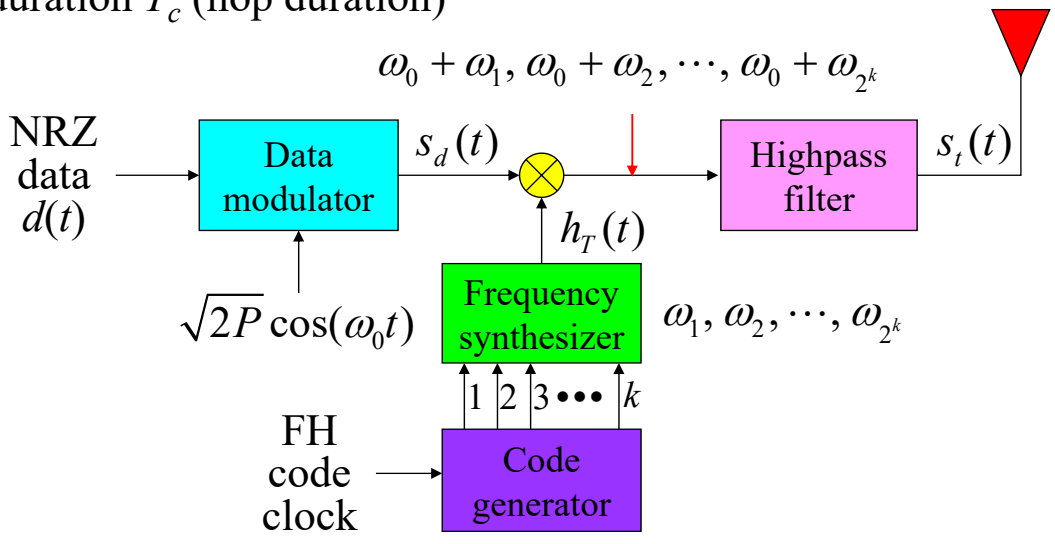

Coherent frequency-hop spread-spectrum transmitter

FHSS – Transmitter (Cont.)

- The signal of the frequency synthesizer output is

$$h_T(t) = \sum_{n=-\infty}^{\infty} 2p(t - nT_c)\cos(\omega_n t + \phi_n)$$

  - $p(t)$ is a unit amplitude pulse of duration T_c (**hop duration**)
  - ω_n and ϕ_n are the radian frequency and the phase during the n-th frequency-hop interval

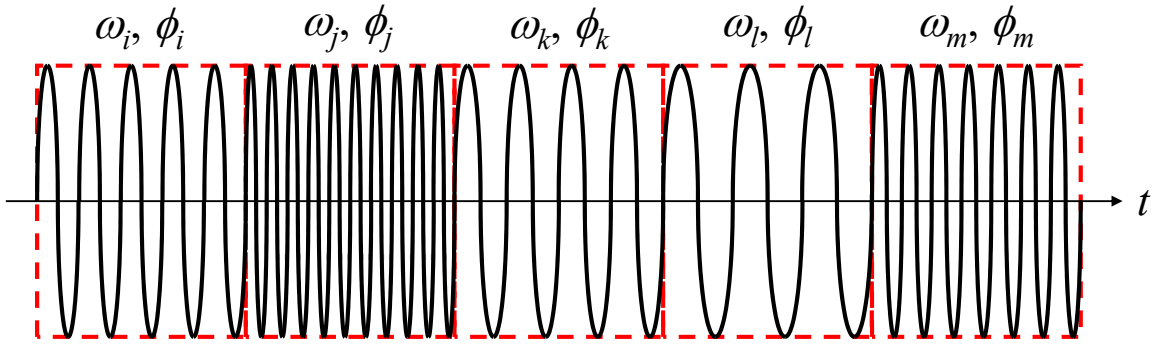

FHSS – Transmitter (Cont.)

- ω_n is taken from a set of 2^k frequencies
  - The spreading code uses ***k* bits** at a time
- The transmitted signal is the data-modulated carrier up-converted to a new frequency ($\omega_0 + \omega_n$) for each FH chip

$$s_t(t) = \left[s_d(t) \sum_{n=-\infty}^{+\infty} 2p(t - nT_c)\cos(\omega_n t + \phi_n) \right] \text{sum of freq. components}$$

FHSS – Receiver

- At the receiver, the frequency de-hopper can recover the received FHSS signal to a **narrowband** signal

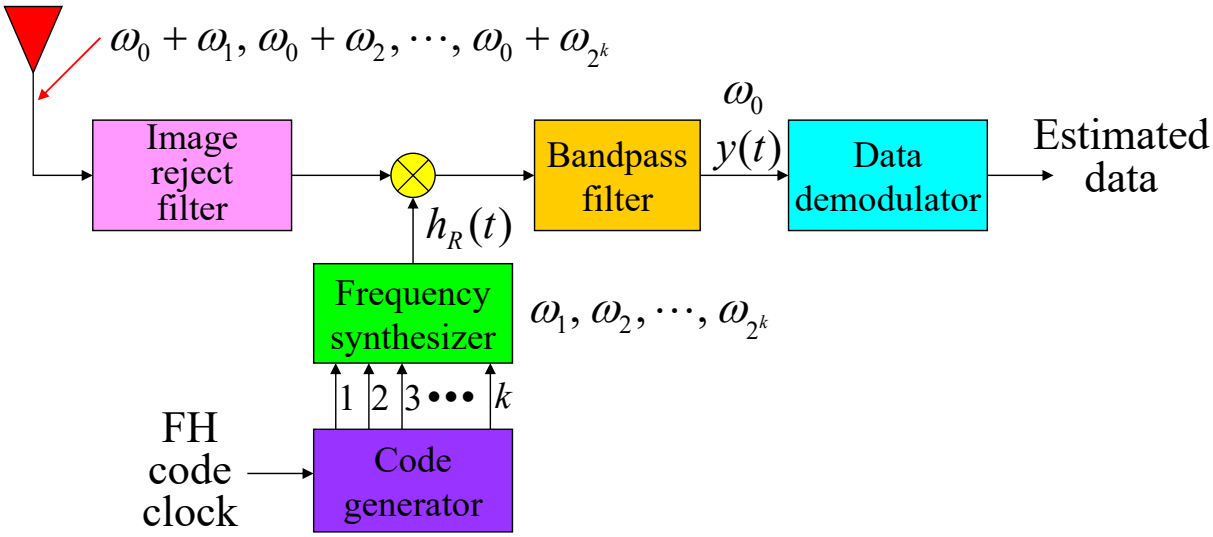

Coherent frequency-hop spread-spectrum receiver

Power Spectral Density of Coherent Slow-FHSS

- The power spectrum of the transmitted signal $S_t(f)$ is the sum frequency term of the convolution of $S_d(f)$ with $S_h(f)$

$$S_t(f) = \int_{-\infty}^{\infty} S_d(f') S_h(f - f')\, df'$$

  - $S_d(f)$: the power spectral density of the **data-modulated carrier** $s_d(t)$
  - $S_h(f)$: the power spectral density of the **hop carrier** $h_T(t)$
- The hopping carrier $h_T(t)$ is assumed to be a **purely random sequence** of frequencies
  - If $h_T(t)$ is periodic, the period would be sufficiently long
- For slow-FHSS, it can be approximated as the sum of the data-modulated carrier PSD translated to **all hop frequencies** and weighted by the probability of transmitting on that frequency

Noncoherent Slow-Frequency-Hop SS

- Due to the difficulty of building truly coherent frequency synthesizers
  - Many FHSS systems use **noncoherent data modulation**
- A common data modulation for FHSS systems is M-ary **frequency shift keying** (MFSK)
  - The data modulator outputs one of 2^L tones for each LT seconds, where $M = 2^L$ and T is the bit duration
  - The frequency spacing is **at least** $1/LT$
  - The output spectral width is approximately $2^L/LT$
  - In each T_c seconds, the data modulator output is translated to a new frequency by the frequency-hop modulator

Noncoherent Slow-Frequency-Hop SS (Cont.)

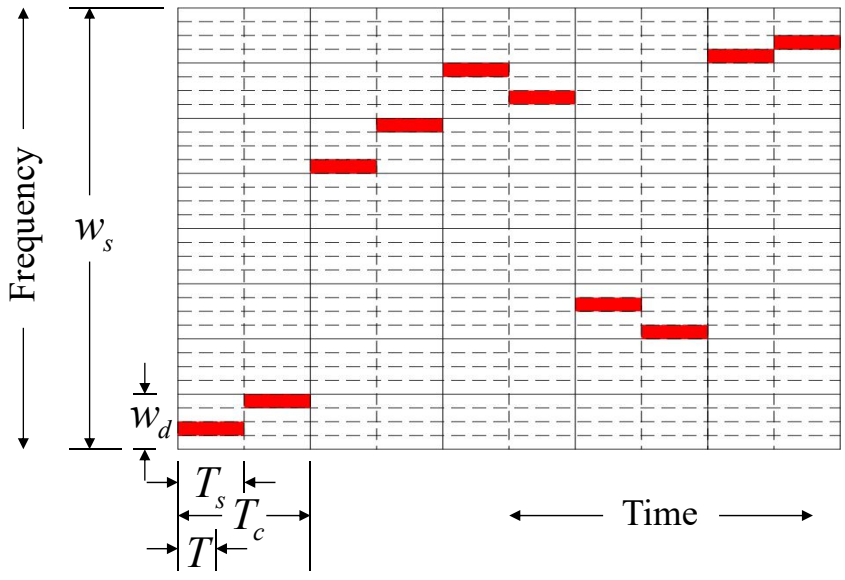

Data 01 11 00 11 11 01 10 00 00 01

$W_d \approx 2^L/LT = 2^L/T_s$; $W_s = 2^k W_d$ $L = 2$; $k = 3$

Transmitted signal for an M-ary FSK slow-FH SS system

Noncoherent Slow-Frequency-Hop SS (Cont.)

- For **slow-frequency-hop** systems: $T_c > LT$ (symbol duration)
- By considering a noise jammer with the average power J:
  - In the **absence** of FH, the jammer chooses a bandwidth W_d centered on the proper carrier frequency $\Rightarrow E_b/N_J = E_b W_d/J$
  - When FH is added, the jammer places noise in all $\mathbf{2^k}$ FH bands $\Rightarrow E_b/N_J = E_b W_s/J$
  - The **processing gain** is $2^k = W_s/W_d$
- The jammer can choose a **narrower** bandwidth (**partial band jamming**) $\Rightarrow$ Probability of being jammed < 1.0 (duty factor)

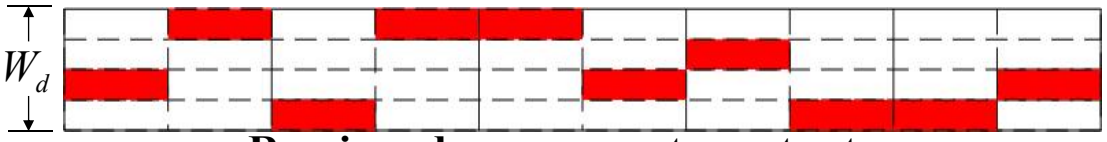

Receiver down-converter output

Noncoherent Fast-Frequency-Hop SS (Cont.)

- For **fast-frequency-hop** systems:
  - $T_c \le LT$ (symbol duration)
  - Each symbol is subdivided into K chips, $1/T_c = K/LT$
- A significant benefit: we have **frequency diversity gain** on **each symbol** for
  - **Partial-band jamming** environments
  - Rapid signal fading (multipath fading) environments
- For the data demodulator, it may
  - Use **hard decision** on each frequency-hop chip and make an estimate based on all K chips, or
  - Apply **maximum likelihood (ML) decision** based on the total received signal

Noncoherent Fast-Frequency-Hop SS (Cont.)

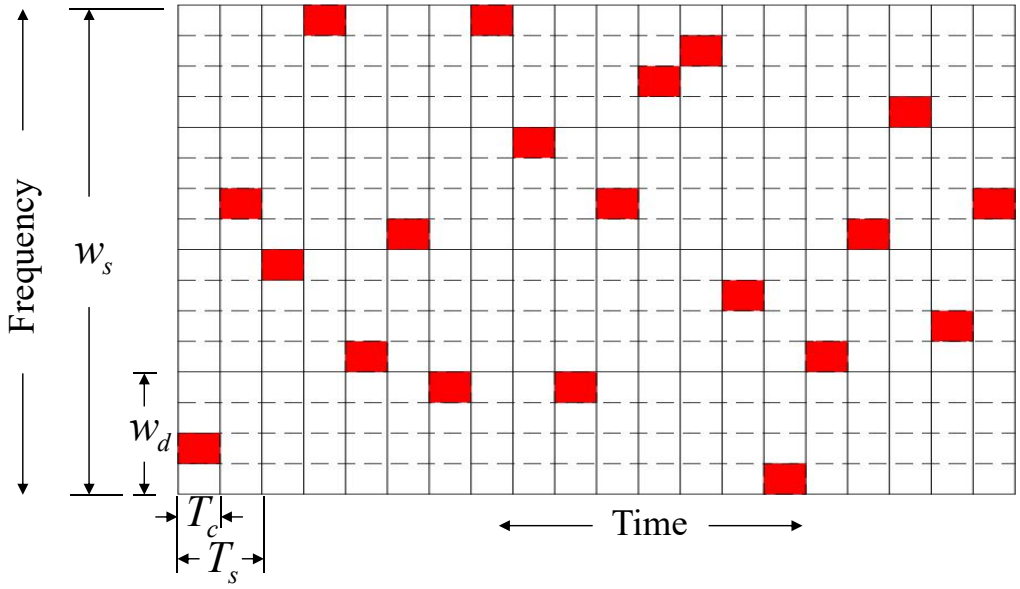

Data **01 11 00 11 11 01 10 00 00 01**

$$W_d \approx 2^L/T_c = K2^L/LT; \quad W_s = 2^k W_d \quad L = K = k = 2$$

Transmitted signal for an *M*-ary FSK fast-FH SS system

Noncoherent Fast-Frequency-Hop SS (Cont.)

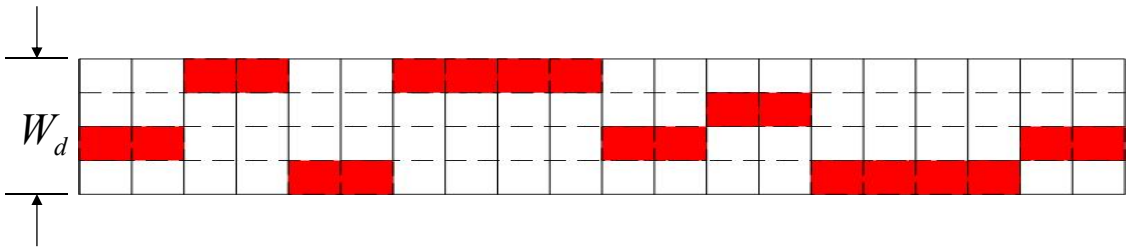

Receiver down-converter output

Bluetooth Wireless Technology

Bluetooth Classic (Bluetooth 1.0 ~ 4.0)

- Bluetooth Classic radio is used to support **point-to-point** device communications (**connection-oriented** data transports)
  - Bluetooth **Basic Rate/Enhanced Data Rate** (BR/EDR)
- A **low power** radio that streams data over **79** channels (**1 MHz** spacing) in the 2.4 GHz **unlicensed** industrial, scientific, and medical (ISM) frequency band.
  - Based on the **Frequency-Hop Spread Spectrum** technique
- Bluetooth Classic has become the standard radio protocol behind wireless speakers, headphones, and in-car entertainment systems.
  - Mainly used to enable **wireless audio streaming**
- Bluetooth Classic radio also enables **data transfer** applications
  - Such as mobile printing

Bluetooth Low Energy (Bluetooth 4.0 ~)

- Bluetooth Low Energy (BLE) radio is designed for **very low power** operation.
- BLE transmits data over **40** channels (**2 MHz** spacing) in the 2.4 GHz unlicensed ISM frequency band.
  - Including **3** advertising channels and **37** data channels
  - Transmissions on data channels are still based on the **Frequency-Hop Spread Spectrum** technique
- BLE supports multiple communication topologies, expanding from point-to-point to **broadcast** and **mesh**.
- BLE extends the data transports from **connection-oriented** modes to **connectionless** modes.

Bluetooth Low Energy Channels

- The advertising channels are numbered as channels 37, 38, 39
  - Support beacon services
- The data channels are numbered from channel 0 to channel 36

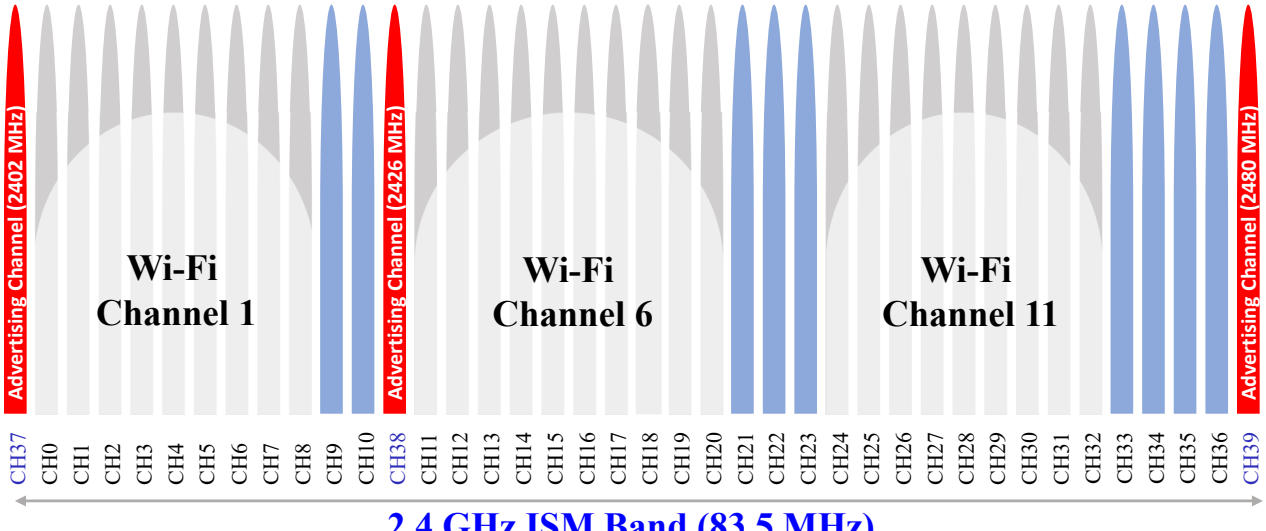

Bluetooth Classic Frequency Hopping

- Bluetooth transmission channels are divided into time slots, each slot being **625 µs** in duration.
  - Packets can be either 1, 3, or 5 slots in duration with **one frequency hop per packet**
- Bluetooth Classic devices hop at a maximum rate of 1600 hops per second, which is **randomly** spread among 79 channels.

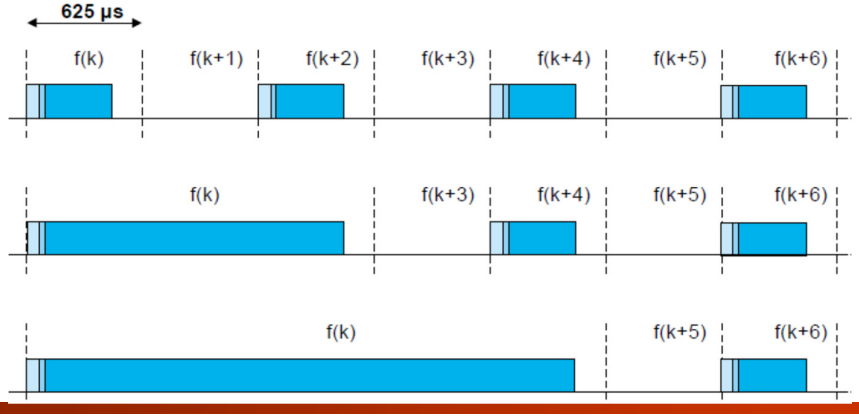

Bluetooth Classic Frequency Hopping Pattern

- A **periodic pseudo-random** hop generator is used for channel selection.
  - The hop sequence period is $\mathbf{2^{27}}$ hops
  - The time period of the hopping pattern is about **23.3 hours**
  - The output ranges from 0 to 78 (by modulo 79 operation)
- The hop period is long enough to avoid hop synchronization between two different Bluetooth transmissions in a short range.

BLE Frequency Hopping

- In BLE, the transmission frequency changes once for every **connection event**.
  - The time slot duration for transmitting a packet is **150 μs**
  - A connection event contains a group of packets
  - **Each connection event** must take place in **a single frequency channel**
- The **connection interval** determines the hop rate
  - The period of a connection event ranges from **7.5 ms** to **4 s** (in multiples of 1.25mS).
- The BLE hop rate is between **133.33** and **0.25** hops per second.
- The hop generator output ranges from 0 to 36 (by modulo 37 operation)

Adaptive Frequency Hopping (AFH)

- **Adaptive Frequency Hopping** (AFH) is available for the Bluetooth connection state only.
  - The channel conditions are permanently monitored to identify **occupied** (by other systems or other users) or **low quality** channels, which are stated as **bad channels**.
  - The bad channels are **excluded from** the available channels until they become **good channels** again.
  - The number of available channels must be larger than or equal to a **minimum required number**. So, bad channels can be also present within the currently used hopping pattern.

Hybrid DS/FH Spread Spectrum

Hybrid DS/FH Spread Spectrum

- A **hybrid** direct-sequence/frequency-hop system employs both direct-sequence and frequency-hop spreading techniques
  - Some of the advantages obtained in both types of systems are combined in a single system
- A hybrid DS/FH SS system employs **differential** BPSK modulation (The MFSK modulation is not suitable for DSSS)
  - **Noncoherent** frequency hopping is used: the data modulation must be either noncoherent or differentially coherent
  - The DPSK modulated carrier is first **DS spread** by $c(t)$
  - Then **frequency hopped** by using the sequence of FH tones $h_T(t)$

Hybrid DS/FH Spread Spectrum – Transmitter

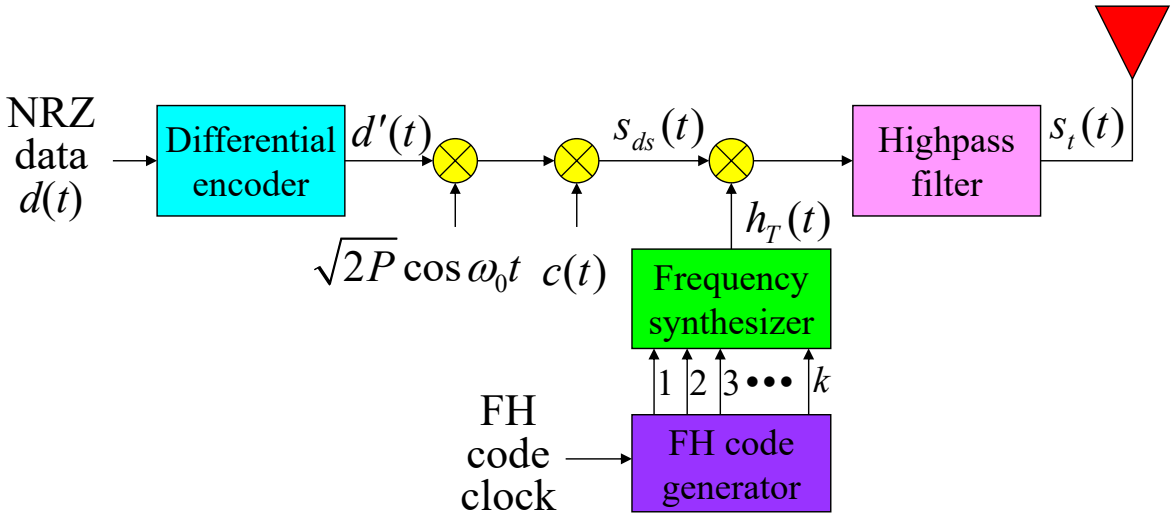

Hybrid DS/FH spread-spectrum transmitter

Hybrid DS/FH Spread Spectrum – Receiver

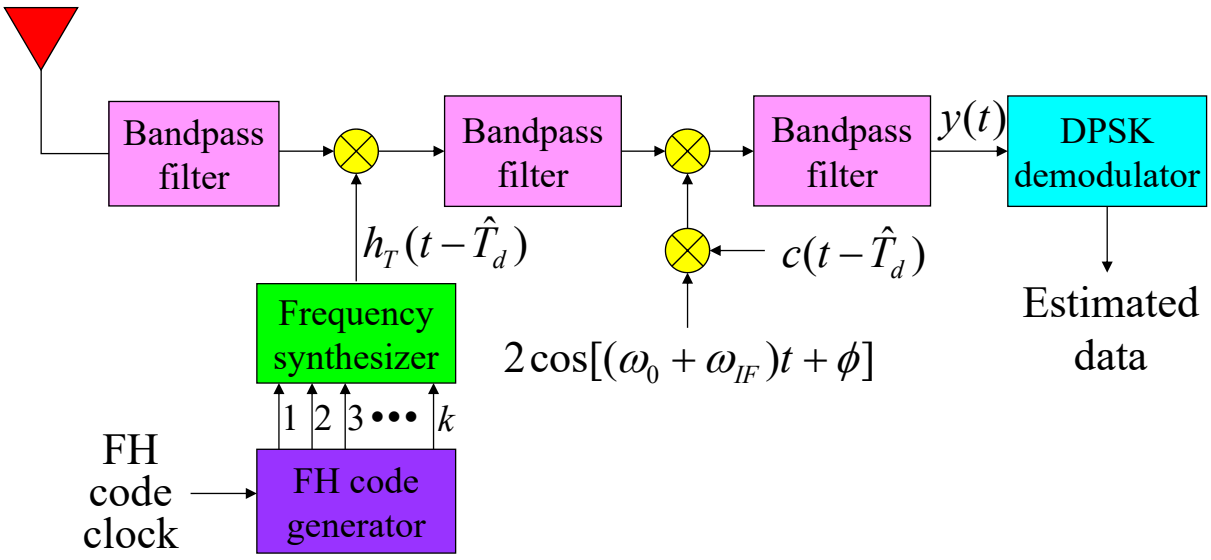

Hybrid DS/FH spread-spectrum receiver

Hybrid DS/FH Spread Spectrum – PSD

- The power spectral density of the transmitted signal $s_t(t)$ is

$$S_t(f) = \left[S_{ds}(f) * S_h(f)\right]_{\substack{\text{sum of} \\ \text{freq. terms}}}$$

$$S_{ds}(f) \approx \frac{1}{2} PT_c \left\{\text{sinc}^2\left[(f - f_0)T_c\right] + \text{sinc}^2\left[(f + f_0)T_c\right]\right\}$$

$$S_t(f) \cong \left[\int_{-\infty}^{\infty} \frac{1}{2} PT_c \left\{\text{sinc}^2\left[(f' - f_0)T_c\right] + \text{sinc}^2\left[(f' + f_0)T_c\right]\right\}\right.$$

$$\left. \times \frac{1}{2^k} \sum_{m=1}^{2^k} \left\{\delta(f - f' - f_m) + \delta(f - f' + f_m)\right\} df' \right]_{\substack{\text{sum of} \\ \text{freq. terms}}}$$

$$= \frac{PT_c}{2^{k+1}} \sum_{m=1}^{2^k} \left\{\text{sinc}^2\left[(f - f_m - f_0)T_c\right] + \text{sinc}^2\left[(f + f_m + f_0)T_c\right]\right\}$$

LoRa Chirp Spread Spectrum

LoRa Chirp Spread Spectrum

- LoRa uses **Chirp Spread Spectrum (CSS)** modulation for signal spreading.
- The data modulation is an ***M*-FSK-like modulation** scheme
  - The modulated carrier wave is not a fixed frequency wave, but a **chirp signal**.
- The occupied **bandwidth** of a channel is fixed, equivalent to the spectral bandwidth of the chirp signal.
  - Uplink channel: **125 KHz** or **500 KHz**
  - Downlink channel: **500 KHz**
- LoRa trades data rate for sensitivity within a **fixed channel bandwidth** (the nature of *M*-FSK modulation)
  - It allows the system to trade data rate for **range** or **power**

LoRa Chirp Spread Spectrum

- For **Chirp Spread Spectrum (CSS)** modulation, a chirp signal can be expressed as

$$s_{\text{ch}}(t) = \exp\left[j2\pi \left(f_{\text{i}} + f_{\text{c}}(t) \right) t \right], \quad f_{\text{c}}(t) = \pm Bt/T_{\text{s}}$$

  - $f_{\text{c}}(t)$ is the instantaneous frequency, which is **linear** with the slope B/T_{s} ('+': up-chirp, '–': down-chirp)
  - B is a **fixed** bandwidth of the chirp signal
  - T_{s} is the symbol duration
- For *M*-FSK modulation, the minimum subchannel separation is $1/T_{\text{s}}$ to maintain **orthogonality**
  - For a fixed bandwidth B, the relation between M and T_{s} is

$$M = BT_{\text{s}}$$

  - $M \downarrow \Rightarrow T_{\text{s}} \downarrow \Rightarrow R_{\text{s}} \uparrow$

For the conventional *M*-FSK

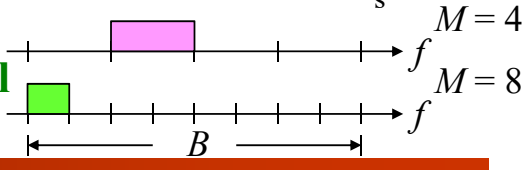

LoRa Chirp Spread Spectrum

- The binary data stream is divided into multiple **subsequences**
  - Each with a length **SF** (spreading factor)$\in \{7, 8, 9, 10, 11, 12\}$
- Each subsequence is used to construct an M-FSK symbol
  - The ratio of the bit rate to the symbol rate is equal to SF
    - Note that "SF" is **different** to the conventional definition
  - The number of possible symbols is $M = 2^{SF}$
  - The constellation contains M signal points (M tones)
- To distinguish the M different symbols of the constellation, we need to define M **orthogonal chirps** (**orthogonal subchannels**)
  - The symbol duration is set as $T_s = M/B$ for orthogonality
  - The chirp representing the m-th point associated to apply **a delay** $\tau_m = m/B$ to the **raw** (original) **chirp signal**

LoRa Chirp Spread Spectrum

- The raw chirp outside $[0, +T_s]$ is **cyclically brought back**
- The modulated chirp related to the transmission of the m-th signal point can be decomposed into two parts:
  - $[0, \tau_m]$: the ramp of the raw chirp defined in $[T_s - \tau_m, T_s]$
  - $[\tau_m, T_s]$: the ramp of the raw chirp defined in $[0, T_s - \tau_m]$
- Correspondingly, for the up chirp signal, the instantaneous frequency is expressed as

$$f_c^{(m)}(t) = \begin{cases} B\left(t + T_s - \tau_m\right)/T_s, & 0 \le t < \tau_m \\ B\left(t - \tau_m\right)/T_s, & \tau_m \le t < T_s \end{cases}$$

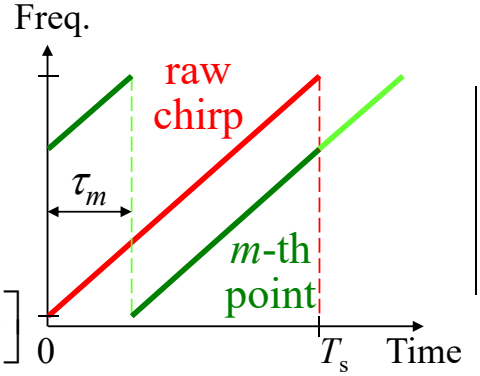

- Eventually, the complex envelope of the transmitted signal is

$$s(t) = \sum_{k \in Z} \exp\left[j2\pi \left(f_i + f_c^k \left(t - kT_s\right)\right)\left(t - kT_s\right)\right]$$

LoRa Chirp Spread Spectrum

- The applying of **a delay** $\tau_m = m/B$ is equivalent to a **frequency shift** of $B\left(T_s - \tau_m\right)/T_s = B - m/T_s$
- The **frequency difference** between the two neighboring signal points, m and m+1, is **fixed** (under cyclically shifting) equal to the minimum subchannel separation of M-FSK

$$\Delta f\left(t\right) = \Delta f = 1/T_s$$

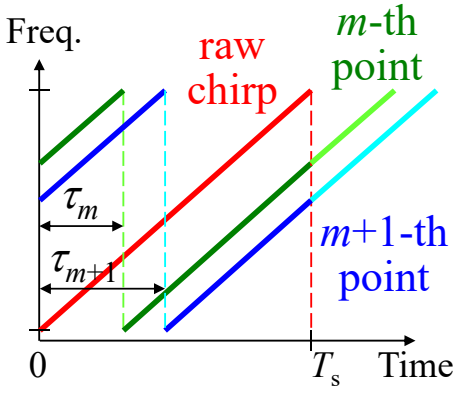

LoRa Chirp Spread Spectrum

- LoRa **uplink** channel:

Spreading Factor	SF10	SF9	SF8	SF7	SF8
Channel Frequency	125 kHz	125 kHz	125 kHz	125 kHz	500 kHz
Bitrate (Bits/Sec)	980	1760	3125	5470	12500

- LoRa **downlink** channel:

Spreading Factor	SF12	SF11	SF10	SF9	SF8	SF8
Channel Frequency	500 kHz	500 kHz	500 kHz	500 kHz	500 kHz	500 kHz
Bitrate (Bits/Sec)	980	1760	3125	5470	12500	21900

LoRa Chirp Spread Spectrum

- Is the LoRa system a spread spectrum system?
  - Strictly speaking, **it is not**!
- The bandwidth required for an M-FSK system with symbol duration T_s is $M/T_s = B$
  - which is **the same as** the total bandwidth of a channel
    - In the viewpoint of **total bandwidth**, no spectrum spreading is performed
  - However, the occupied bandwidth for **each subchannel** is spread from $1/T_s$ to B by a factor of M

Spread Spectrum Advantages

Spread Spectrum Advantages

- The advantages of spread spectrum technologies include:
  - Anti-jamming
  - Anti-multipath interference
  - Anti-fading
  - Low probability of intercept
  - Limited Secrecy
  - Multiple Access
  - Spectrum sharing between different systems
  - Low frequency reuse factor (for cellular systems)

Anti-Jamming

Larger processing gain ⇒ Better performance

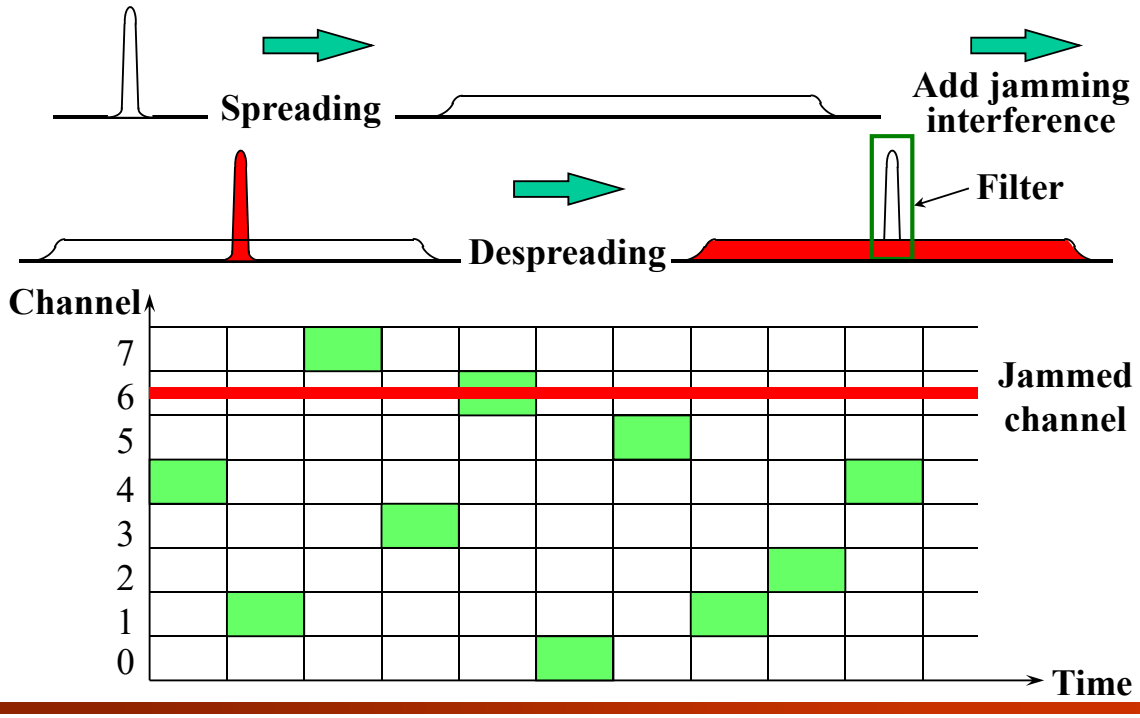

Anti-Multipath Interference

Larger processing gain (chip rate) ⇒ Better performance

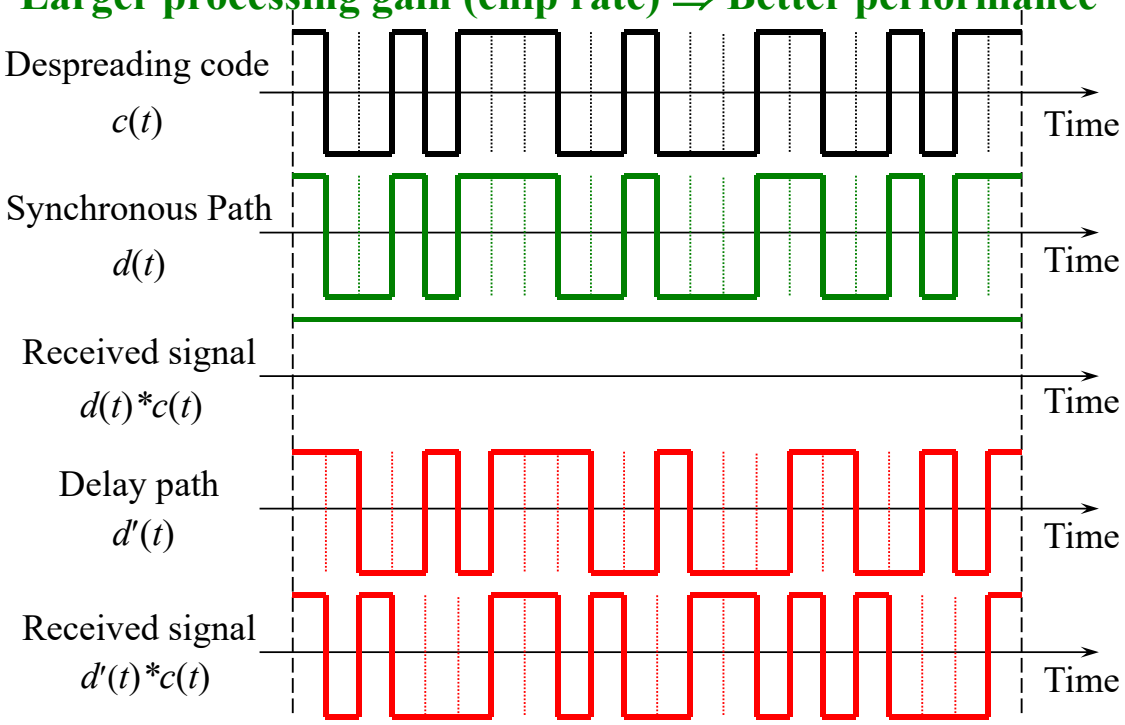

Anti-Fading (DSSS)

Larger processing gain (chip rate) ⇒ Better performance

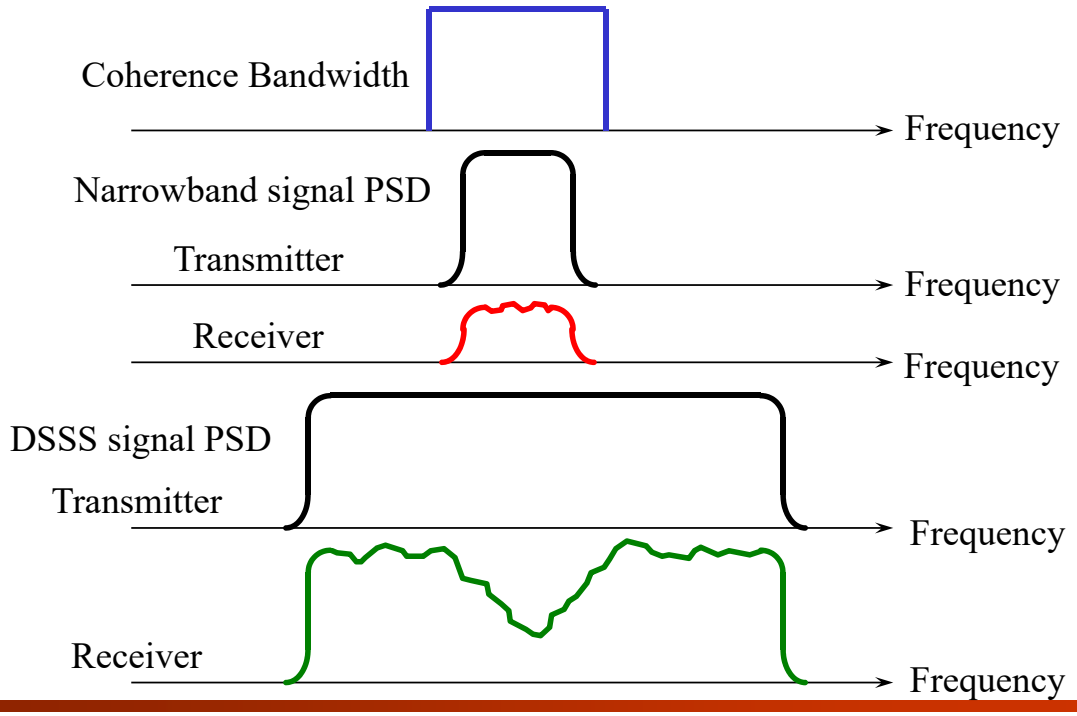

Anti-Fading (FHSS)

Larger processing gain ⇒ Better performance

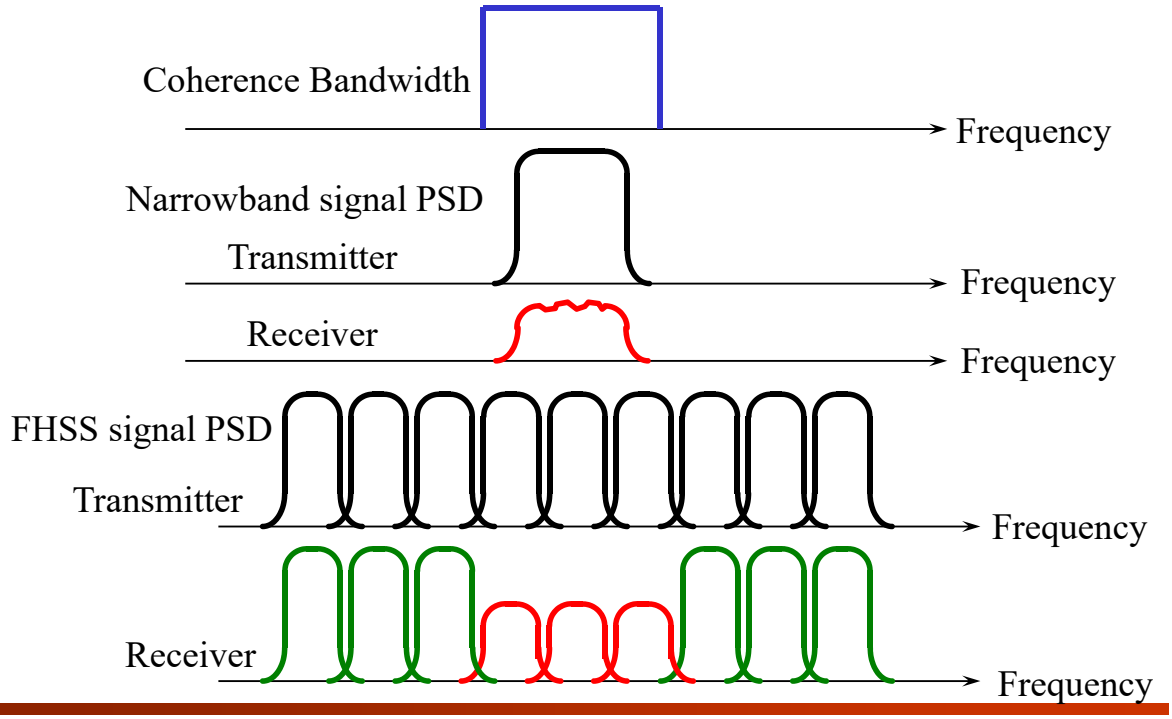

Low Probability of Intercept & Multiple Access

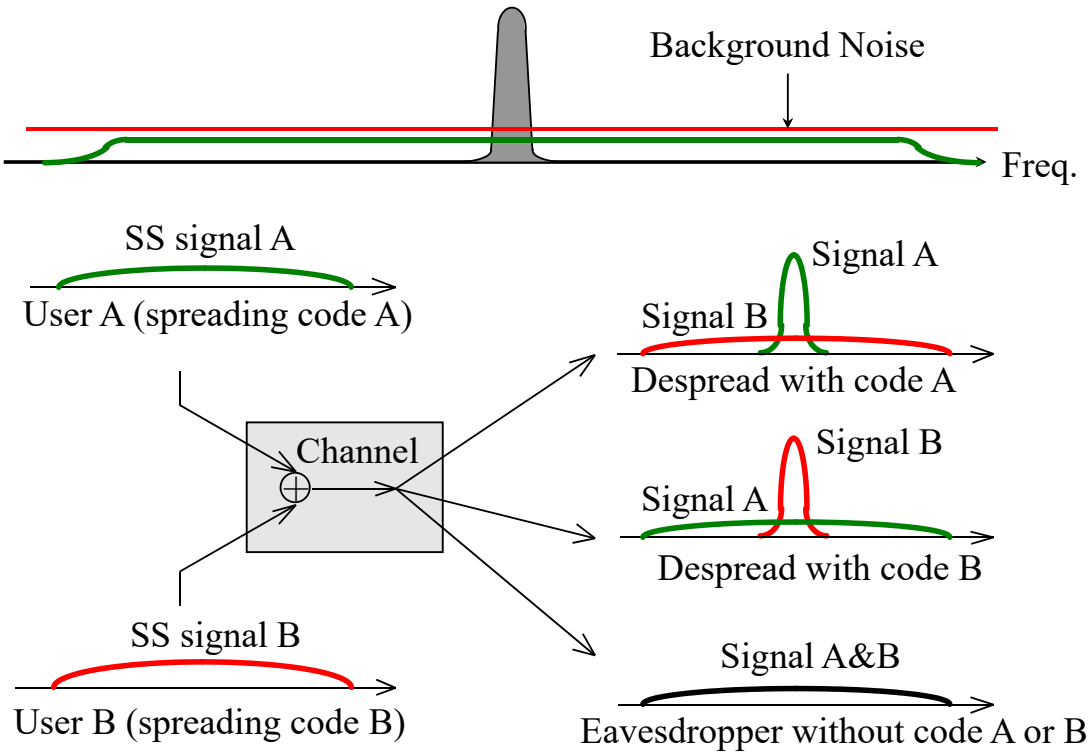

Spectrum Sharing Between Different Systems

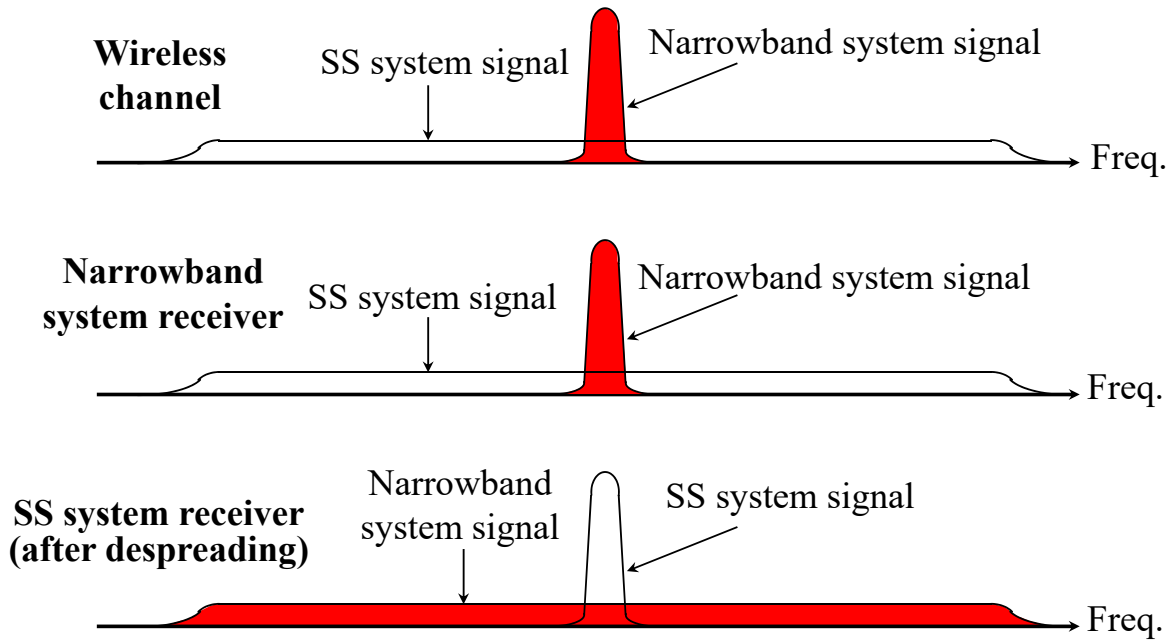

Low Frequency Reuse Factor

- For **narrowband** systems, the applied frequency reuse factor is larger than 1 (3, 4, 7, or 12, …)
- For **CDMA** systems, the frequency reuse factor is equal to 1
  - All cells can use **the same frequency band**

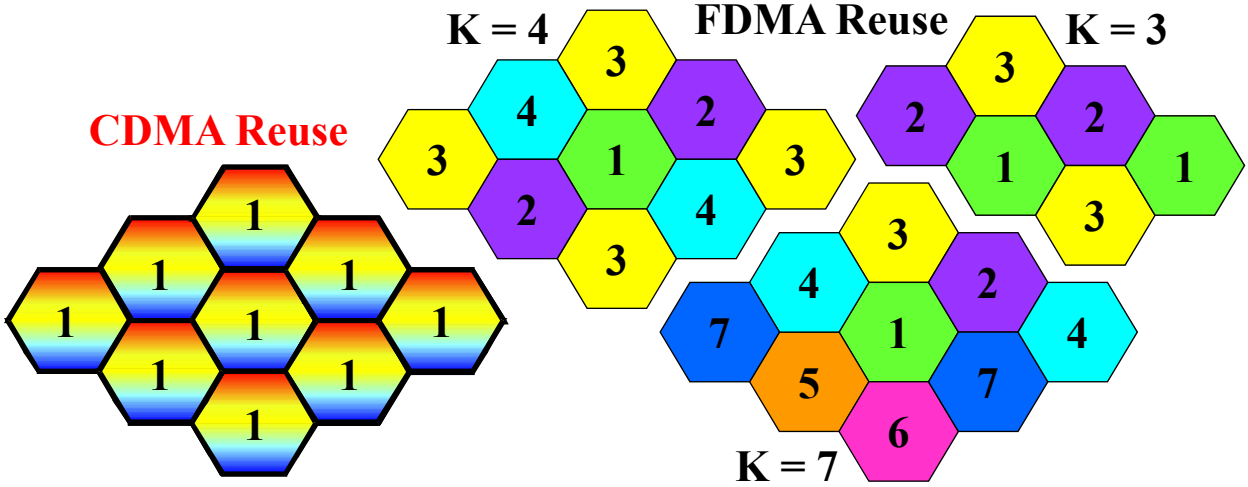

ISM Band Regulations

Industrial, Scientific and Medical (ISM) Band

- The **industrial, scientific and medical (ISM)** radio bands are radio bands **reserved for** the use of **radio frequency (RF) energy** for industrial, scientific and medical purposes **other than radio communications**.
  - RF heating, microwave ovens, medical diathermy machines
- The ISM bands are also allocated for the applications of communications, including **unlicensed** radio communications
  - The ISM devices may generate great **interference** to radio communications using the same frequency band
  - The communications devices may also be interfered by other unlicensed communications devices
  - The equipment must tolerate any interference from ISM applications or other unlicensed communications devices

ISM Band (Cont.)

- North America FCC ISM band regulations:
  - The communication-related regulations are in **CFR** (Code of Federal Regulations) **Title 47, Sec. 15.247**
- Three major ISM bands are allocated for **unlicensed** radio communications:
  - 902 ~ 928 MHz
  - 2400 ~ 2483.5 MHz
  - 5725 ~ 5850 MHz
- Sec. 15.247 Operation within the bands 902-928 MHz, 2400-2483.5 MHz, and 5725-5850 MHz.

ISM Band Regulations

- **(a)** Operation under the provisions of this Section is limited to **frequency hopping** and **digitally modulated** intentional radiators that comply with the following provisions:

- **(1) Frequency hopping systems** shall have hopping channel carrier frequencies separated by a minimum of **25 kHz** or the **20 dB bandwidth** of the hopping channel, whichever is greater.
- Alternatively, frequency hopping systems operating in the **2400-2483.5 MHz** band may have hopping channel carrier frequencies that are separated by **25 kHz** or **two-thirds of the 20 dB bandwidth** of the hopping channel, whichever is greater,
  - Provided the systems operate with an output power no greater than **125 mW**.

ISM Band Regulations (Cont.)

- The system shall hop to channel frequencies that are selected at the system hopping rate from a **pseudo-randomly** ordered list of hopping frequencies.
- Each frequency must be used **equally** on the average by each transmitter.
- The system receivers shall have **input bandwidths** that match the **hopping channel bandwidths** of their corresponding transmitters and shall shift frequencies in synchronization with the transmitted signals.

ISM Band Regulations (Cont.)

- (i) For FH systems operating in the **902-928 MHz** band:
  - 20 dB bandwidth of the hopping channel: **less than 250 kHz**
    - Number of hopping frequencies: **at least 50**
    - Average time of occupancy on any frequency: no greater than **0.4 seconds** within a **20 second** period
  - 20 dB bandwidth of the hopping channel: **250 kHz or greater**
    - Number of hopping frequencies: **at least 25**
    - Average time of occupancy on any frequency: no greater than **0.4 seconds** within a **10 second** period.
  - The **maximum** allowed 20 dB bandwidth of the hopping channel is **500 kHz**.

0.4 × 50 = 20;
0.4 × 25 = 10;
⇒ Equally used

ISM Band Regulations (Cont.)

- (ii) For FH systems operating in the **5725-5850 MHz** band:
  - Number of hopping frequencies: **at least 75**
  - Average time of occupancy on any frequency: no greater than **0.4 seconds** within a **30 second** period
  - The **maximum** 20 dB bandwidth of the hopping channel is **1 MHz**.
- (iii) For FH systems operating in the **2400-2483.5 MHz** band:
  - Number of hopping frequencies: **at least 15**
  - Average time of occupancy on any frequency: no greater than **0.4 seconds** within a period of 0.4 seconds multiplied by the number of hopping channels employed

ISM Band Regulations (Cont.)

- **(2)** Systems using **digital modulation** techniques may operate in the 902-928 MHz, 2400-2483.5 MHz, and 5725-5850 MHz bands.
- The minimum **6 dB bandwidth** shall be at least **500 kHz**.

- **Note:**
  - The original defined **direct sequence spread spectrum (DSSS)** systems can be regarded as a kind of **digitally modulated** systems.
  - Some other transmission techniques can also be used for the applications of radio communications
    - **OFDM** for wireless LAN

ISM Band Regulations (Cont.)

- **(b)** The **maximum peak** conducted output power of the intentional radiator shall not exceed the following:

- **(1)** For **frequency hopping** systems:
  - The FH systems in the **5725-5850 MHz** band: **1 watt**
  - The FH systems in the **2400-2483.5 MHz** band
    - Employing **at least 75** non-overlapping channels: **1 watt**
    - All other FH systems: **0.125 watts**
- **(2)** For FH systems in the **902-928 MHz** band:
  - Employing **at least 50** hopping channels: **1 watt**
  - Employing **less than 50** hopping channels: **0.25 watts**

ISM Band Regulations (Cont.)

- **(3)** For systems using **digital modulation** in the 902-928 MHz, 2400-2483.5 MHz, and 5725-5850 MHz bands: **1 Watt**.
- **(4)** The conducted output power limit is based on the use of antennas with directional gains that **do not exceed 6 dBi**.
  - If transmitting antennas of directional gain **greater than** 6 dBi are used, the conducted output power from the intentional radiator shall be **reduced**
    - By the amount in dB that the directional gain of the antenna exceeds 6 dBi.

ISM Band Regulations (Cont.)

- **(d)** In any **100 kHz** bandwidth **outside** the frequency band in which the spread spectrum or digitally modulated intentional radiator is operating, the radio frequency power that is produced by the intentional radiator shall be **at least 20 dB below** that in the 100 kHz bandwidth within the band that contains the highest level of the desired power.
- **(e)** For **digitally modulated systems**, the **power spectral density** conducted from the intentional radiator to the antenna shall not be greater than **8 dBm** in **any 3 kHz band** during any time interval of continuous transmission.