展頻通訊
(Spread Spectrum Communications)

國立清華大學電機系暨通訊工程研究所
蔡育仁
台達館 821 室
Tel: 62210
E-mail: yrtsai@ee.nthu.edu.tw

Chapter 4
Code Tracking Loops

Contents

- Introduction
- Optimum Tracking of Wideband Signals
- Baseband Delay-Lock Tracking Loop
- Noncoherent Delay-Lock Tracking Loop
- Tau-Dither Noncoherent Tracking Loop
- Double-Dither Noncoherent Tracking Loop
- Code Tracking Loops for FH Systems

Introduction

- There are two components in the synchronization problem:
  - **Code acquisition**: determination of the **initial code phase**
  - **Code tracking**: **maintaining** of code synchronization after initial acquisition
- Code acquisition: acquire the code phase of the spreading code in **chip level** (from the perspective of DSSS)
- Code tracking: track the spreading code to **minimize** the timing error

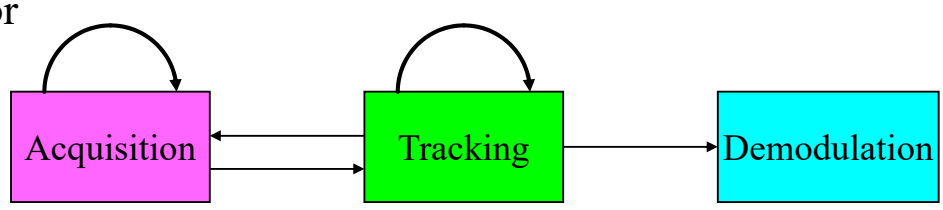

Acquisition → Tracking & Demodulation → Lose Tracking → Acquisition → Tracking & Demodulation → …

Introduction (Cont.)

- Code tracking is accomplished using **phase-locked** techniques very similar to **carrier tracking**
  - The principal difference is the **phase discriminator**
    - For carrier tracking: **a multiplier**
    - For code tracking: several **multipliers** and pairs of **filters** and **envelope detectors**
- The phase discriminators make use of **correlation operations**
  - Two different phases **(early** and **late)** of **receiver-generated** spreading waveform are used

Introduction (Cont.)

- These correlation operations can be accomplished using:
  - Two independent correlators: delay-lock tracking loop (**DLL**)
  - A single correlator (time shared): tau-dither tracking loop (**TDL**)
- The transmission delay is usually **a function of time**, $T_d(t)$
  - Mainly due to user mobility
- The code tracking loops are designed to achieve low root mean square (rms) **tracking jitter** in the present of AWGN
  - In order to achieve a good tracking performance of $T_d(t)$
- The loop bandwidth is selected to be a compromise
  - **Wide bandwidth**: facilitate tracking the **dynamics** of $T_d(t)$
  - **Narrow bandwidth**: minimize the **tracking jitter** due to interference

Optimum Tracking of Wideband Signals

Optimum Tracking of Wideband Signals

- The optimum tracking discriminator for an **arbitrary wideband signal** received with AWGN is
  - A multiplier that forms the product of
    - The received signal plus noise and
    - The first derivative **(with respect to time)** of the **receiver-generated** replica of the transmitted signal

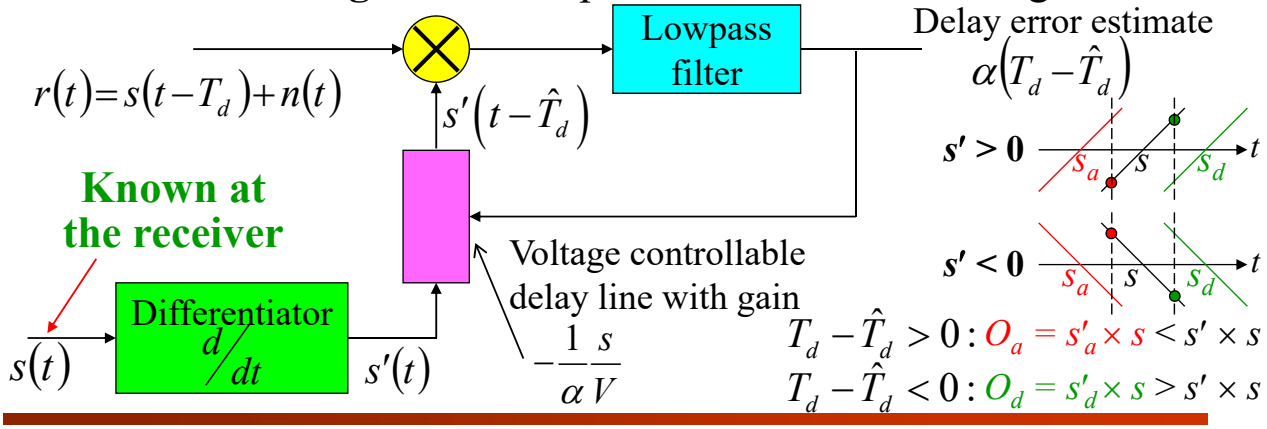

Optimum Tracking of Wideband Signals (Cont.)

- This discriminator is optimum
  - Its output is a **maximum likelihood estimate** of the phase difference between the two wideband signals in an AWGN environment
- The received signal

$$r(t) = s(t - T_d) + n(t)$$

  is multiplied by a **differentiated and delayed** replica $s'(t - \hat{T}_d)$
- The output contains a **DC component** related to the delay error, i.e., $(T_d - \hat{T}_d)$
- This **DC component** is extracted by the **low-pass filter** and used to correct the delay of the voltage controllable delay line

Optimum Tracking of Wideband Signals (Cont.)

- Suppose that the received signal is the baseband spreading waveform $c(t - T_d)$ and thermal noise is ignored
- The received signal $c(t - T_d)$ and the delayed replica $c(t - \hat{T}_d)$

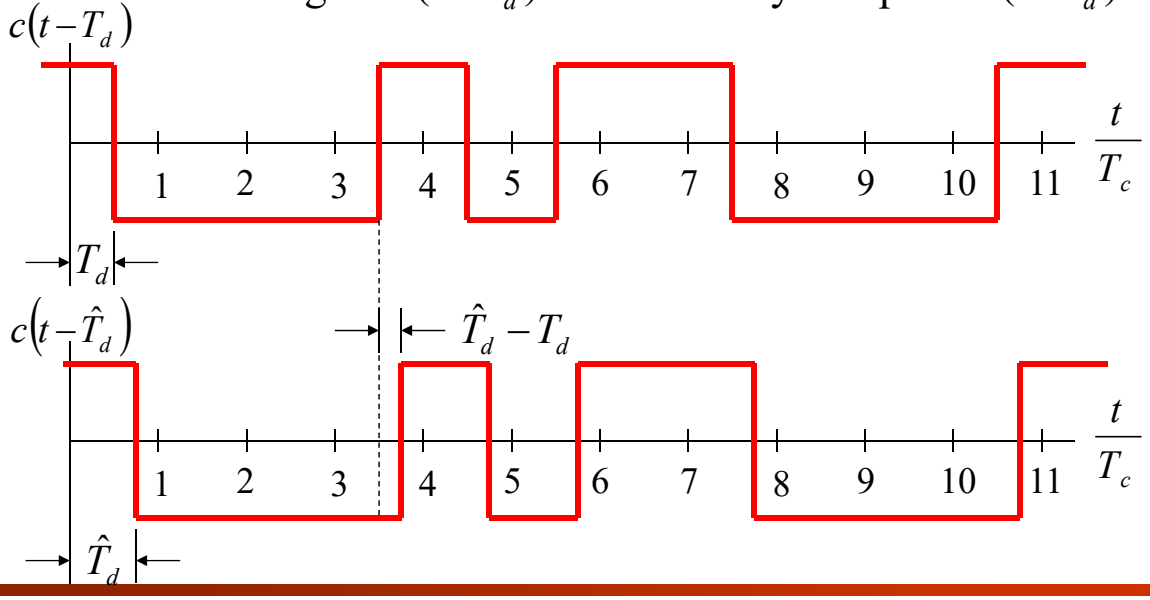

Optimum Tracking of Wideband Signals (Cont.)

- The first derivative of $c(t-\hat{T}_d)$ is

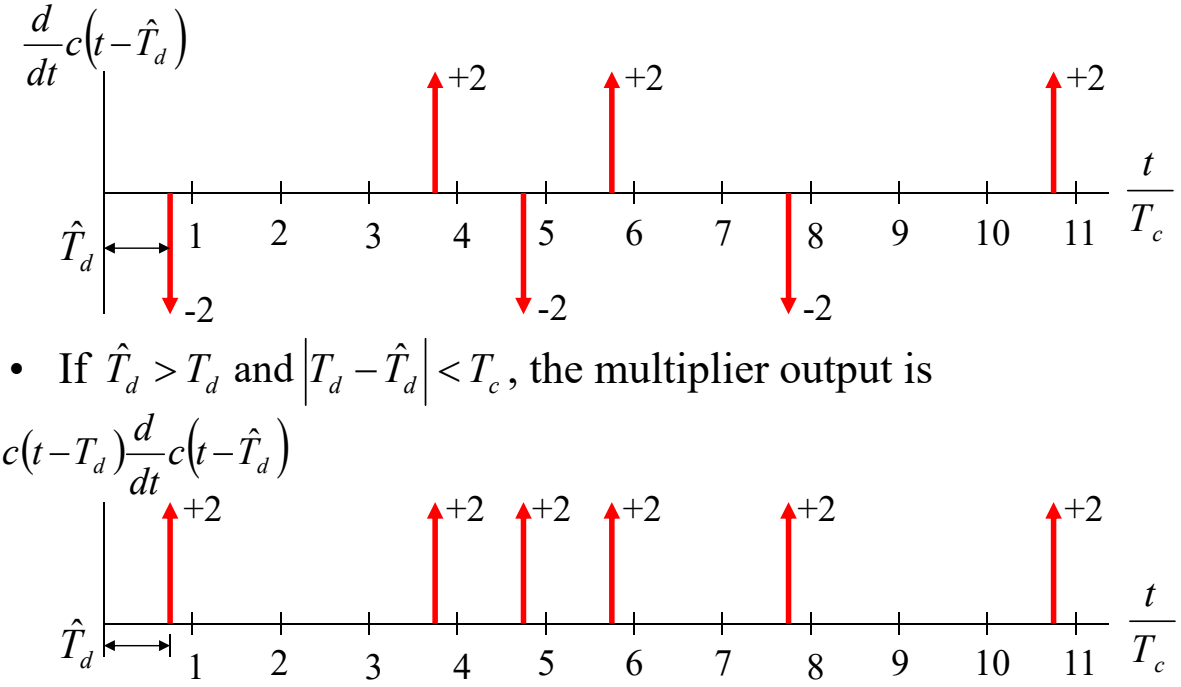

- If $\hat{T}_d > T_d$ and $|T_d - \hat{T}_d| < T_c$, the multiplier output is

Optimum Tracking of Wideband Signals (Cont.)

- For an m-sequence with period N and chip duration T_c, the number of **transitions** of an m-sequence is
  - By ***Property V***, the total number of runs of subsequence is

$$2\times(2^{r-3}+2^{r-2}+\cdots+2^1+2^0)+2=2\times(2^{r-2}-1)+2=2^{r-1}$$

  $\Rightarrow$ The number of transitions is $2^{r-1} = ½\,(N+1)$
- If $\hat{T}_d > T_d$ and $|T_d - \hat{T}_d| < T_c$:
  - The impulse functions at the multiplier output are all **positive**
  - The **DC component** is the time average of

$$c(t-T_d)\frac{d}{dt}\left[c(t-\hat{T}_d)\right]=\frac{2\times(N+1)/2}{NT_c}=\frac{N+1}{NT_c}$$

  - The observation interval is NT_c and there are ½ $(N+1)$ transitions

Optimum Tracking of Wideband Signals (Cont.)

- If $\hat{T}_d < T_d$ and $\left|T_d - \hat{T}_d\right| < T_c$, the impulse functions at the multiplier output are all **negative**
  - The **DC component** is

$$c(t-T_d)\frac{d}{dt}\left[c(t-\hat{T}_d)\right] = -\frac{N+1}{NT_c}$$

- If $\left|T_d - \hat{T}_d\right| > T_c$, there is an **equal number** of positive and negative impulses
  - The number of transition is ½ (N+1), and the impulses may be positive or negative (depending on the phase shift)
  - The **DC component** is

$$c(t-T_d)\frac{d}{dt}\left[c(t-\hat{T}_d)\right] = 0$$

Optimum Tracking of Wideband Signals (Cont.)

- The DC output of the multiplier is a function of the normalized delay difference $\delta = (T_d - \hat{T}_d)/T_c$

$$E\left[c(t-T_d)\frac{d}{dt}c(t-T_d)\right]$$

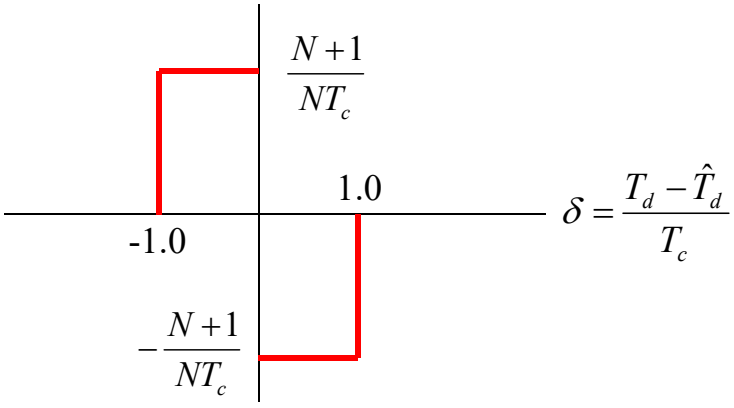

Baseband Delay-Lock Tracking Loop

Baseband Delay-Lock Tracking Loop

- The baseband DLL is to track the **time-varying** phase of the received spreading waveform $c(t - T_d)$
- The received signal is

$$s_r(t) = \sqrt{P}c(t - T_d) + n(t)$$

  - P is the power of spreading waveform
  - $n(t)$ is AWGN with two-sided power spectral density $N_0/2$
- The received signal is input to the delay-lock discriminator, after power division, it is correlated with
  - An **early** spreading waveform $c(t - \hat{T}_d + (\Delta/2)T_c)$
  - An **late** spreading waveform $c(t - \hat{T}_d - (\Delta/2)T_c)$
  - Δ is the **time difference** between the early and late channels

Block Diagram of Baseband DLL

- The block diagram of the baseband delay-lock tracking loop is

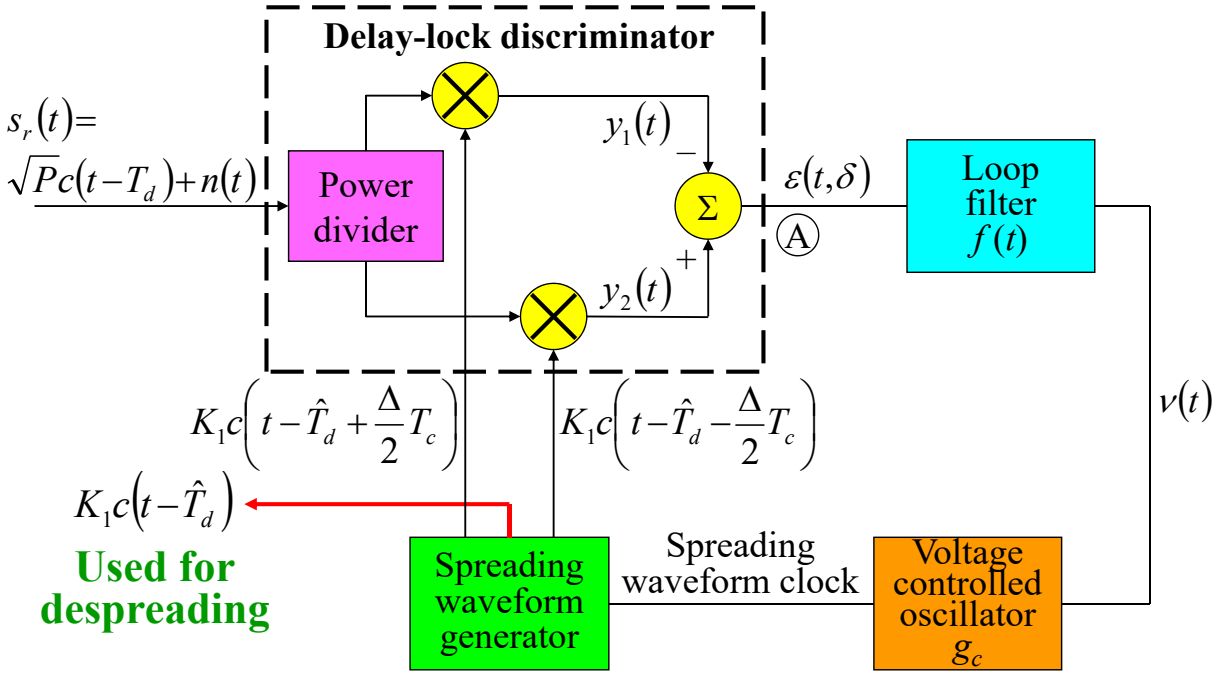

Delay-Lock Discriminator Output

- The output of the **early-correlator** is:

$$y_1(t,T_d,\hat{T}_d)=K_1\sqrt{\frac{P}{2}}c(t-T_d)c(t-\hat{T}_d+\frac{\Delta}{2}T_c)$$

- The output of the **late-correlator** is:

$$y_2(t,T_d,\hat{T}_d)=K_1\sqrt{\frac{P}{2}}c(t-T_d)c(t-\hat{T}_d-\frac{\Delta}{2}T_c)$$

- The **difference** of $y_1(t)$ and $y_2(t)$ is:

$$\varepsilon(t,T_d,\hat{T}_d)=K_1\sqrt{\frac{P}{2}}c(t-T_d)\left[c(t-\hat{T}_d-\frac{\Delta}{2}T_c)-c(t-\hat{T}_d+\frac{\Delta}{2}T_c)\right]$$

  - The **DC component** is used for code tracking
  - The **time-varying component** is called **code shift-noise**

Delay-Lock Discriminator Output (Cont.)

- The **DC component** is:

$$K_1\sqrt{\frac{P}{2}}D_\Delta(T_d,\hat{T}_d)=\frac{1}{NT_c}\int_{-NT_c/2}^{NT_c/2}K_1\sqrt{\frac{P}{2}}c(t-T_d)$$
$$\times\left[c(t-\hat{T}_d-\frac{\Delta}{2}T_c)-c(t-\hat{T}_d+\frac{\Delta}{2}T_c)\right]dt$$

$$R_c(\tau)=\frac{1}{T}\int_0^T c(t)c(t+\tau)\,dt$$

$$D_\Delta(T_d,\hat{T}_d)=R_c(T_d-\hat{T}_d-\frac{\Delta}{2}T_c)-R_c(T_d-\hat{T}_d+\frac{\Delta}{2}T_c)$$
$$=R_c\left[(\delta-\frac{\Delta}{2})T_c\right]-R_c\left[(\delta+\frac{\Delta}{2})T_c\right]$$
$$\triangleq D_\Delta(\delta)$$

Delay-Lock Discriminator Output (Cont.)

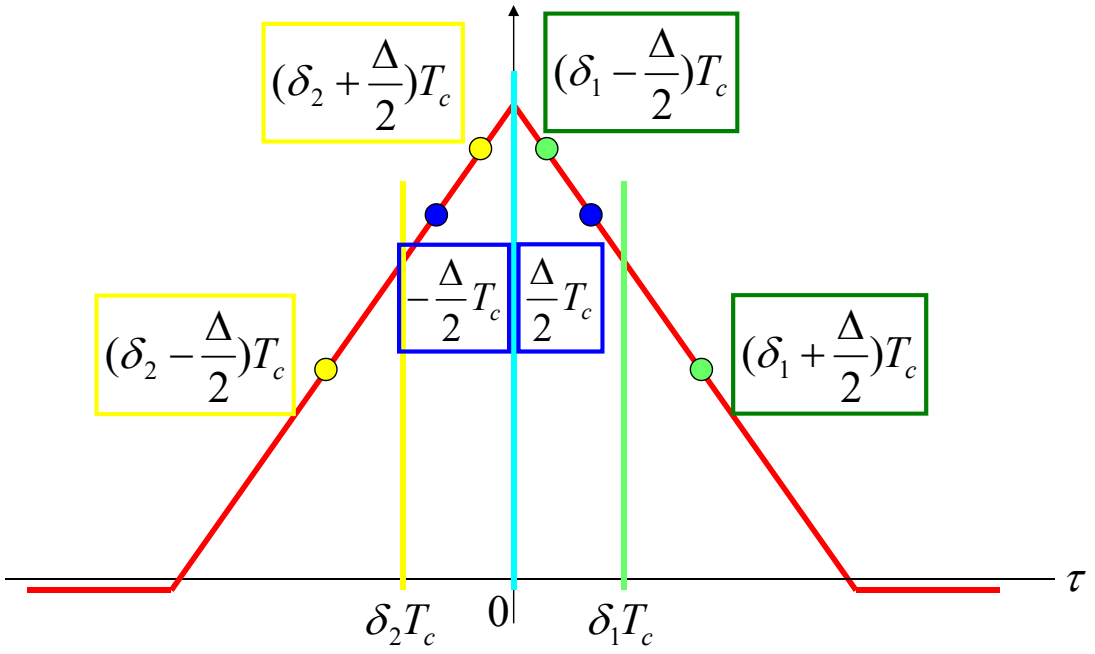

Delay-Lock Discriminator DC Output

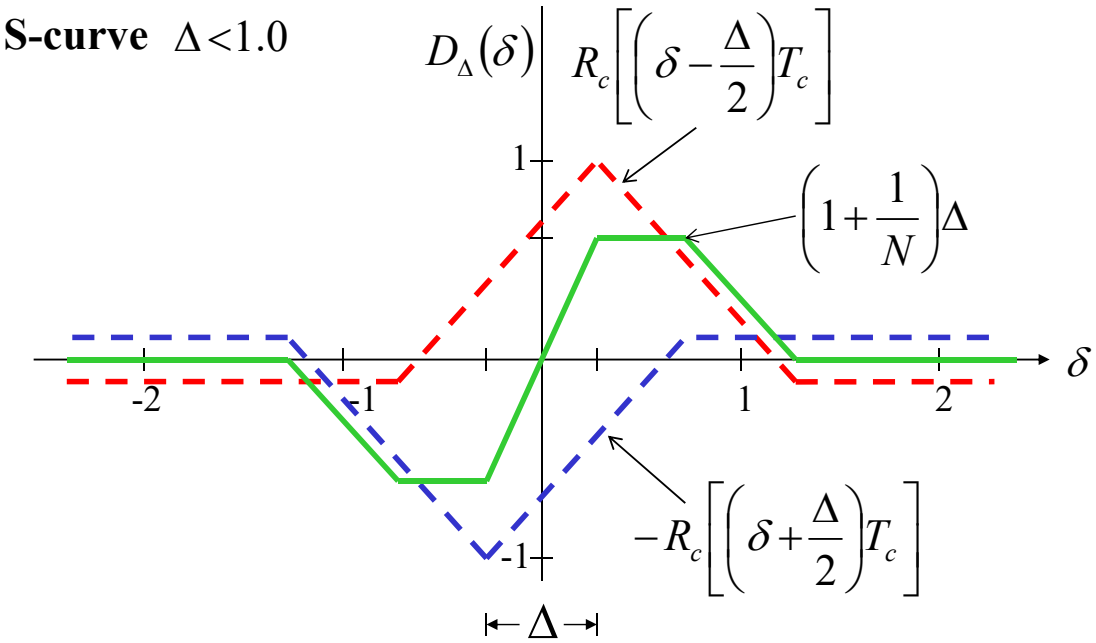

Delay-Lock Discriminator DC Output (Cont.)

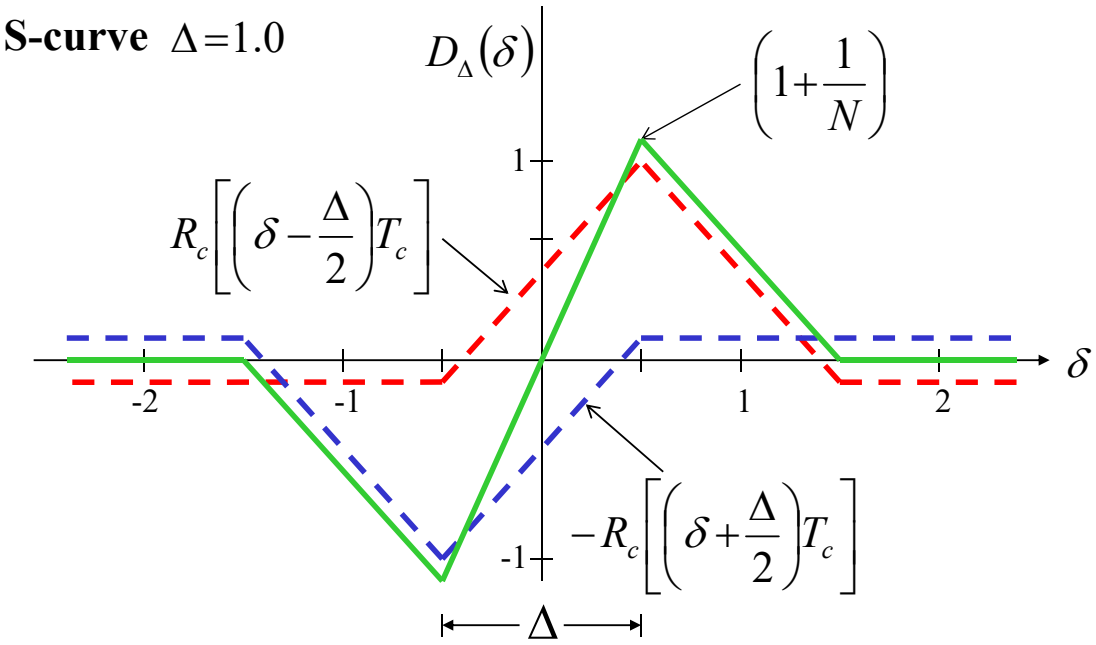

Delay-Lock Discriminator DC Output (Cont.)

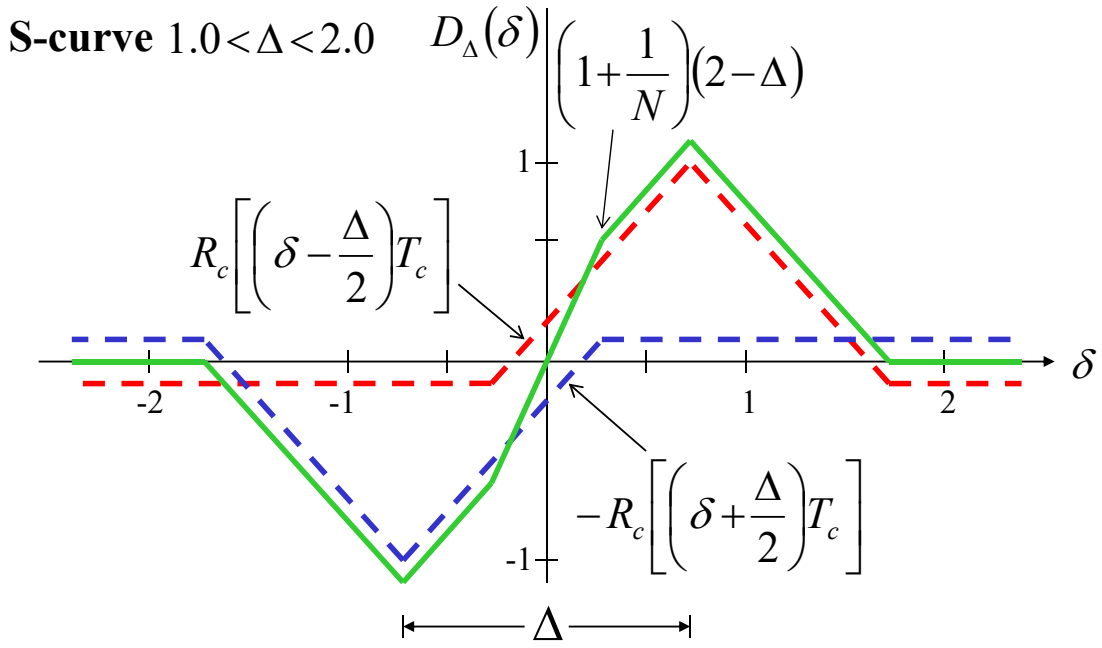

Delay-Lock Discriminator DC Output (Cont.)

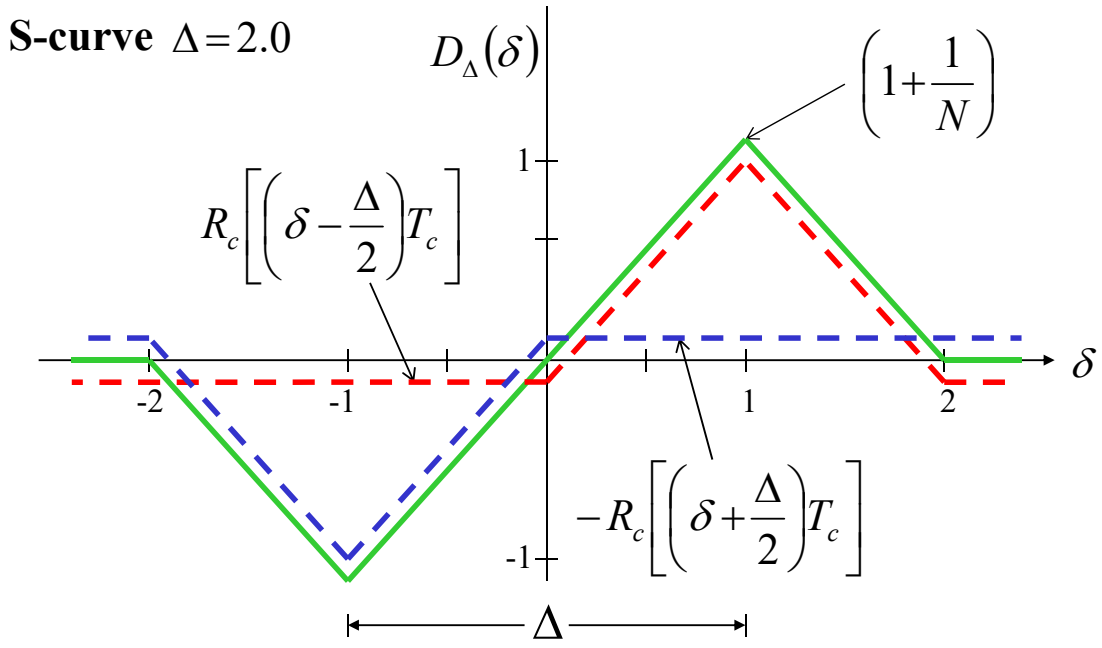

Baseband Delay-Lock Tracking Loop

- $\hat{T}_d > T_d$: $\delta < 0 \Rightarrow D_\Delta(\delta) = y_2(t) - y_1(t) < 0 \Rightarrow v(t) < 0 \Rightarrow$ clock $\uparrow$ $\Rightarrow \hat{T}_d \downarrow$

$$y_1(t) = R_c\left[(\delta + \frac{\Delta}{2})T_c\right] > R_c\left[(\delta - \frac{\Delta}{2})T_c\right] = y_2(t)$$

- $\hat{T}_d < T_d$: $\delta > 0 \Rightarrow D_\Delta(\delta) = y_2(t) - y_1(t) > 0 \Rightarrow v(t) > 0 \Rightarrow$ clock $\downarrow$ $\Rightarrow \hat{T}_d \uparrow$

$$y_1(t) = R_c\left[(\delta + \frac{\Delta}{2})T_c\right] < R_c\left[(\delta - \frac{\Delta}{2})T_c\right] = y_2(t)$$

Same phase

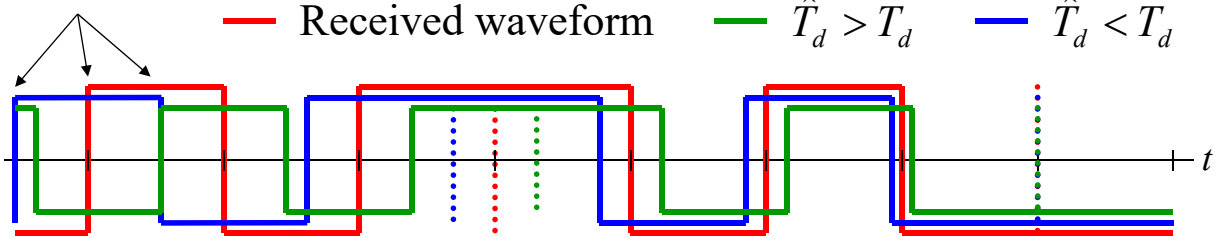

Baseband Delay-Lock Tracking Loop (Cont.)

- There is a range of δ near zero for which $D_\Delta(\delta)$ is **linearly** related to δ
  - This range is selected as the **normal operation region**
  - The **slop** of the discriminator **S-curve** near $\delta = 0$ is
    - $2(1+1/N)$ for all Δ, $0 < \Delta < 2.0$
  - The linear range of δ is
    - $|\delta| < \Delta/2$ for $\Delta \le 1$
    - $|\delta| < 1 - \Delta/2$ for $1 \le \Delta < 2$
- Near $\delta = 0$ ($\delta < \Delta/2$), the time difference of
  - $c(t - T_d)$ & $c(t - \hat{T}_d - \Delta/2\, T_c)$ is $(\Delta/2 - \delta)T_c$
  - $c(t - T_d)$ & $c(t - \hat{T}_d + \Delta/2\, T_c)$ is $(\delta + \Delta/2)T_c$

Baseband Delay-Lock Tracking Loop (Cont.)

$$R_c\left[(\delta-\frac{\Delta}{2})T_c\right]=1-\left(1+\frac{1}{N}\right)\times(\frac{\Delta}{2}-\delta)$$

$$R_c\left[(\delta+\frac{\Delta}{2})T_c\right]=1-\left(1+\frac{1}{N}\right)\times(\delta+\frac{\Delta}{2})$$

$$R_c\left[(\delta-\frac{\Delta}{2})T_c\right]-R_c\left[(\delta+\frac{\Delta}{2})T_c\right]=2\delta\left(1+\frac{1}{N}\right)$$

$$\Rightarrow \text{slop}=2\left(1+\frac{1}{N}\right)$$

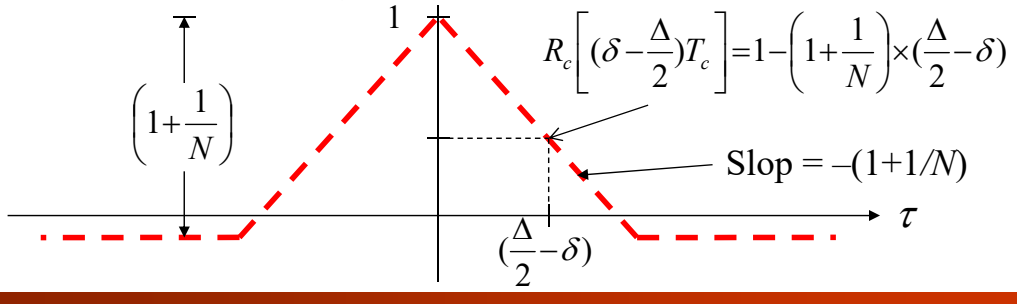

Baseband DLL with AWGN

- Generally, the time-varying component of $\varepsilon(t,T_d,\hat{T}_d)$

$$K_1\sqrt{P/2}N_\Delta(t,T_d,\hat{T}_d)$$

can be **ignored** (filtered out by the loop filter)

– The self-noise power is at frequencies **(high frequency)** outside the bandwidth of the tracking loop **(baseband)**

Noncoherent Delay-Lock Tracking Loop

Noncoherent Delay-Lock Tracking Loop

- Two difficulties arise when the **baseband DLL** is applied to **actual** spread-spectrum systems
  - Since the tracking loop input is the spreading waveform $c(t)$:
    - $c(t)$ must be recovered from the carrier **prior to code tracking** (received signal $r(t) = d(t) \times c(t)$)

    $\Rightarrow$The received signal must be demodulated (to obtain the spreading waveform $c(t)$) **prior to code tracking**
    - A coherent **carrier reference** (**carrier phase** for coherent demodulation) must be generated **prior to demodulation**
  - Since SS systems typically operate at **very low SNR**

  $\Rightarrow$This demodulation and generation of carrier reference will be **difficult**
- What if $d(t) \times c(t)$ with $d(t) = -1$ is used in the baseband DLL?

Noncoherent Delay-Lock Tracking Loop (Cont.)

- Note that the baseband tracking loop analyzed previously has **ignored any data modulation**
  - Any communication system must convey information from the transmitter to the receiver

    $\Rightarrow$The carrier is **modulated with the information**
- The baseband loop would **not** function properly when the received signal is $d(t - T_d) \times c(t - T_d)$ rather than $c(t - T_d)$
- Hence, the **noncoherent delay-lock tracking loop** is applied to **actual** spread-spectrum systems
  - Neither of these difficulties are present for the noncoherent delay-lock tracking loop

Noncoherent Delay-Lock Tracking Loop (Cont.)

- The phase discriminator contains two **energy detectors**:
  - Not sensitive to **data modulation** or **carrier phase**

    $\Rightarrow$ The discriminator can **ignore data modulation and carrier phase**
- A conceptual block diagram when the spreading modulation is binary phase-shift keying is shown in Fig. 4-9
- The received signal is a **data** and **spreading code**-modulated carrier with bandlimited AWGN

$$r(t) = \sqrt{2P}c(t - T_d)\cos[(\omega_0 t + \theta_d(t - T_d) + \phi] + n(t)$$

  - $\theta_d(t - T_d)$ is the arbitrary data phase modulation, T_d is the transmission delay, ϕ is the random received carrier phase, ω_0 is the carrier radian frequency, and $n(t)$ is the noise

Block Diagram of Noncoherent DLL

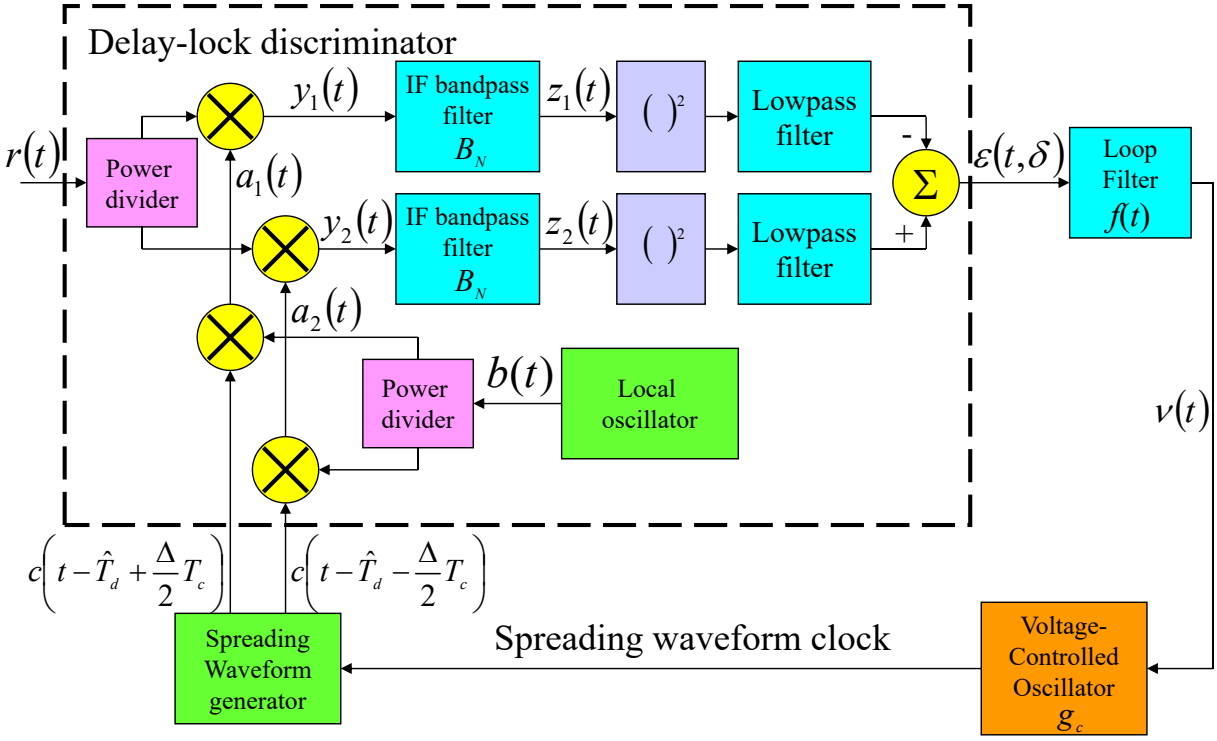

Noncoherent Delay-Lock Tracking Loop (Cont.)

- The received noise is assumed to be a bandlimited zero-mean Gaussian noise with a two-sided power spectral density of $N_0/2$

$$n(t) = \sqrt{2}n_I(t)\cos\omega_0(t) - \sqrt{2}n_Q(t)\sin\omega_0(t)$$

  - Where $n_I(t)$ and $n_Q(t)$ are **independent** zero-mean low-pass white Gaussian noise with a two-sided power spectral density of $N_0/2$
- The received signal is power divided and then correlated with **early** and **late** spreading waveform modulated local oscillator signals

$$b(t) = 2\sqrt{2K_1}\cos[(\omega_0 - \omega_{IF})t + \phi']$$

  - where ω_{IF} is the intermediate radian frequency

Noncoherent Delay-Lock Tracking Loop (Cont.)

$$a_1(t) = 2\sqrt{K_1}c(t-\hat{T}_d+\frac{\Delta}{2}T_c)\cos[(\omega_0-\omega_{IF})t+\phi']$$

$$a_2(t) = 2\sqrt{K_1}c(t-\hat{T}_d-\frac{\Delta}{2}T_c)\cos[(\omega_0-\omega_{IF})t+\phi']$$

- Consider only the intermediate frequency terms:

$$y_1(t) = \sqrt{K_1 P}c(t-T_d)c\left(t-\hat{T}_d+\frac{\Delta}{2}T_c\right)\cos\left[\omega_{IF}t+\phi-\phi'+\theta_d(t-T_d)\right]$$
$$+\sqrt{K_1}n_I(t)c\left(t-\hat{T}_d+\frac{\Delta}{2}T_c\right)\cos\left(\omega_{IF}t-\phi'\right)$$
$$-\sqrt{K_1}n_Q(t)c\left(t-\hat{T}_d+\frac{\Delta}{2}T_c\right)\sin\left(\omega_{IF}t-\phi'\right)$$

Noncoherent Delay-Lock Tracking Loop (Cont.)

$$y_2(t) = \sqrt{K_1 P}c(t-T_d)c\left(t-\hat{T}_d-\frac{\Delta}{2}T_c\right)\cos\left[\omega_{IF}t+\phi-\phi'+\theta_d(t-T_d)\right]$$
$$+\sqrt{K_1}n_I(t)c\left(t-\hat{T}_d-\frac{\Delta}{2}T_c\right)\cos\left(\omega_{IF}t-\phi'\right)$$
$$-\sqrt{K_1}n_Q(t)c\left(t-\hat{T}_d-\frac{\Delta}{2}T_c\right)\sin\left(\omega_{IF}t-\phi'\right)$$

- Define the noise components by

$$\begin{cases} n_1(t) = \sqrt{\dfrac{K_1}{2}}c\left(t-\hat{T}_d+\dfrac{\Delta}{2}T_c\right)n'(t) & \text{early} \\ n_2(t) = \sqrt{\dfrac{K_1}{2}}c\left(t-\hat{T}_d-\dfrac{\Delta}{2}T_c\right)n'(t) & \text{late} \end{cases}$$

$$n'(t) = \sqrt{2}n_I(t)\cos\left(\omega_{IF}t-\phi'\right)-\sqrt{2}n_Q(t)\sin\left(\omega_{IF}t-\phi'\right)$$

Noncoherent Delay-Lock Tracking Loop (Cont.)

- For **high processing gains** (data symbols do not impact the correlator output), the only components of interest are

$$y_1(t)=\sqrt{K_1P}c(t-T_d)c\left(t-\hat{T}_d+\frac{\Delta}{2}T_c\right)\cos\left[\omega_{IF}t+\phi-\phi'+\theta_d(t-T_d)\right]$$

$$y_2(t)=\sqrt{K_1P}c(t-T_d)c\left(t-\hat{T}_d-\frac{\Delta}{2}T_c\right)\cos\left[\omega_{IF}t+\phi-\phi'+\theta_d(t-T_d)\right]$$

- The **DC component** of the spreading waveform product is the autocorrelation function of the spreading waveform

$$y_1(t)\cong\sqrt{K_1P}R_c\left[(\delta+\frac{\Delta}{2})T_c\right]\cos\left[\omega_{IF}t+\phi-\phi'+\theta_d(t-T_d)\right]\equiv x_1(t)$$

$$y_2(t)\cong\sqrt{K_1P}R_c\left[(\delta-\frac{\Delta}{2})T_c\right]\cos\left[\omega_{IF}t+\phi-\phi'+\theta_d(t-T_d)\right]\equiv x_2(t)$$

  - where $\delta=(T_d-\hat{T}_d)/T_c$

Noncoherent Delay-Lock Tracking Loop (Cont.)

- The signal component of the delay-lock discriminator output is:

$$\begin{aligned}\varepsilon(t,\delta)&=[x_2^2(t)-x_1^2(t)]_{\text{lowpass}}\\&=\frac{1}{2}K_1P\left\{R_c^2\left[(\delta-\frac{\Delta}{2})T_c\right]-R_c^2\left[(\delta+\frac{\Delta}{2})T_c\right]\right\}\\&\equiv\frac{1}{2}K_1PD_\Delta(\delta)\end{aligned}$$

  - where

$$D_\Delta(\delta)\equiv R_c^2\left[\left(\delta-\frac{\Delta}{2}\right)T_c\right]-R_c^2\left[\left(\delta+\frac{\Delta}{2}\right)T_c\right]$$

Noncoherent Delay-Lock Tracking Loop (Cont.)

- For *m*-sequence spreading waveform with $\Delta \geq 1.0$:

$$D_{\Delta}(\delta)=\begin{cases}0 & \text{for } -N+1+\dfrac{\Delta}{2}<\delta\leq-\left(1+\dfrac{\Delta}{2}\right)\\ \dfrac{1}{N^2}-\left[1+\left(1+\dfrac{1}{N}\right)\left(\delta+\dfrac{\Delta}{2}\right)\right]^2 & \text{for } -\left(1+\dfrac{\Delta}{2}\right)<\delta\leq-\dfrac{\Delta}{2}\\ \dfrac{1}{N^2}-\left[1-\left(1+\dfrac{1}{N}\right)\left(\delta+\dfrac{\Delta}{2}\right)\right]^2 & \text{for } -\dfrac{\Delta}{2}<\delta\leq-\left(1-\dfrac{\Delta}{2}\right)\\ 2\left(1+\dfrac{1}{N}\right)\left[2-\left(1+\dfrac{1}{N}\right)\Delta\right]\delta & \text{for } -\left(1-\dfrac{\Delta}{2}\right)<\delta\leq\left(1-\dfrac{\Delta}{2}\right)\\ \left[1+\left(1+\dfrac{1}{N}\right)\left(\delta-\dfrac{\Delta}{2}\right)\right]^2-\dfrac{1}{N^2} & \text{for } \left(1-\dfrac{\Delta}{2}\right)<\delta\leq\dfrac{\Delta}{2}\\ \left[1-\left(1+\dfrac{1}{N}\right)\left(\delta-\dfrac{\Delta}{2}\right)\right]^2-\dfrac{1}{N^2} & \text{for } \dfrac{\Delta}{2}<\delta\leq1+\dfrac{\Delta}{2}\end{cases}$$

Noncoherent Delay-Lock Tracking Loop (Cont.)

- For *m*-sequence spreading waveform with $\Delta \leq 1.0$:

$$D_{\Delta}(\delta)=\begin{cases}0 & \text{for } -N+1+\dfrac{\Delta}{2}<\delta\leq-\left(1+\dfrac{\Delta}{2}\right)\\ \dfrac{1}{N^2}-\left[1+\left(\delta+\dfrac{\Delta}{2}\right)\left(1+\dfrac{1}{N}\right)\right]^2 & \text{for } -\left(1+\dfrac{\Delta}{2}\right)<\delta\leq\left(\dfrac{\Delta}{2}-1\right)\\ -2\left(1+\dfrac{1}{N}\right)\Delta\left[1+\left(1+\dfrac{1}{N}\right)\delta\right] & \text{for } \left(\dfrac{\Delta}{2}-1\right)<\delta\leq-\dfrac{\Delta}{2}\\ 2\left(1+\dfrac{1}{N}\right)\left[2-\left(1+\dfrac{1}{N}\right)\Delta\right]\delta & \text{for } -\dfrac{\Delta}{2}<\delta\leq+\dfrac{\Delta}{2}\\ 2\left(1+\dfrac{1}{N}\right)\Delta\left[1-\left(1+\dfrac{1}{N}\right)\delta\right] & \text{for } \dfrac{\Delta}{2}<\delta\leq\left(1-\dfrac{\Delta}{2}\right)\\ \left[1-\left(1+\dfrac{1}{N}\right)\left(\delta-\dfrac{\Delta}{2}\right)\right]^2-\dfrac{1}{N^2} & \text{for } \left(1-\dfrac{\Delta}{2}\right)<\delta\leq\left(1+\dfrac{\Delta}{2}\right)\end{cases}$$

Noncoherent Delay-Lock Tracking Loop (Cont.)

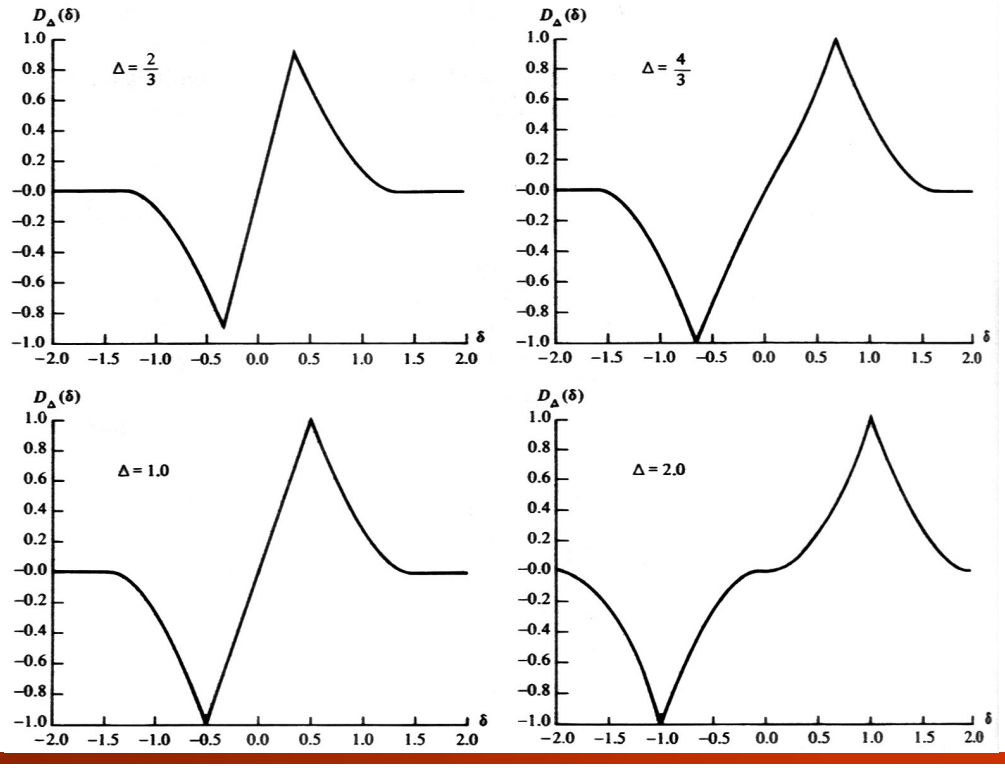

Noncoherent Delay-Lock Tracking Loop (Cont.)

- In the range near $\delta = 0$, $D_\Delta(\delta)$ is a **linear function** of δ
- The slope of $D_\Delta(\delta)$ near $\delta = 0$ is **a function of Δ** and equals zero when $\Delta = 2.0$
  - $\Delta = 2.0$ is **never used** for noncoherent delay-lock tracking loop

Tau-Dither Noncoherent Tracking Loop

Tau-Dither Noncoherent Tracking Loop

- The noncoherent delay-lock tracking loop is widely used. However, it has two major problems:
  - The early and late IF channels must be **precisely amplitude balanced**
    - If not, the discriminator characteristic is **offset** and does **not** produce **zero** output when the tracking error is zero
  - The DLL uses **costly components** somewhat freely
- The **tau-dither** tracking loop (TDL) solved these two problems:
  - **Time sharing a single correlation channel** for both early and late IF channels
  - The price paid is **slightly worst** noise performance and more difficult analysis

Block Diagram of Tau-Dither Noncoherent DLL

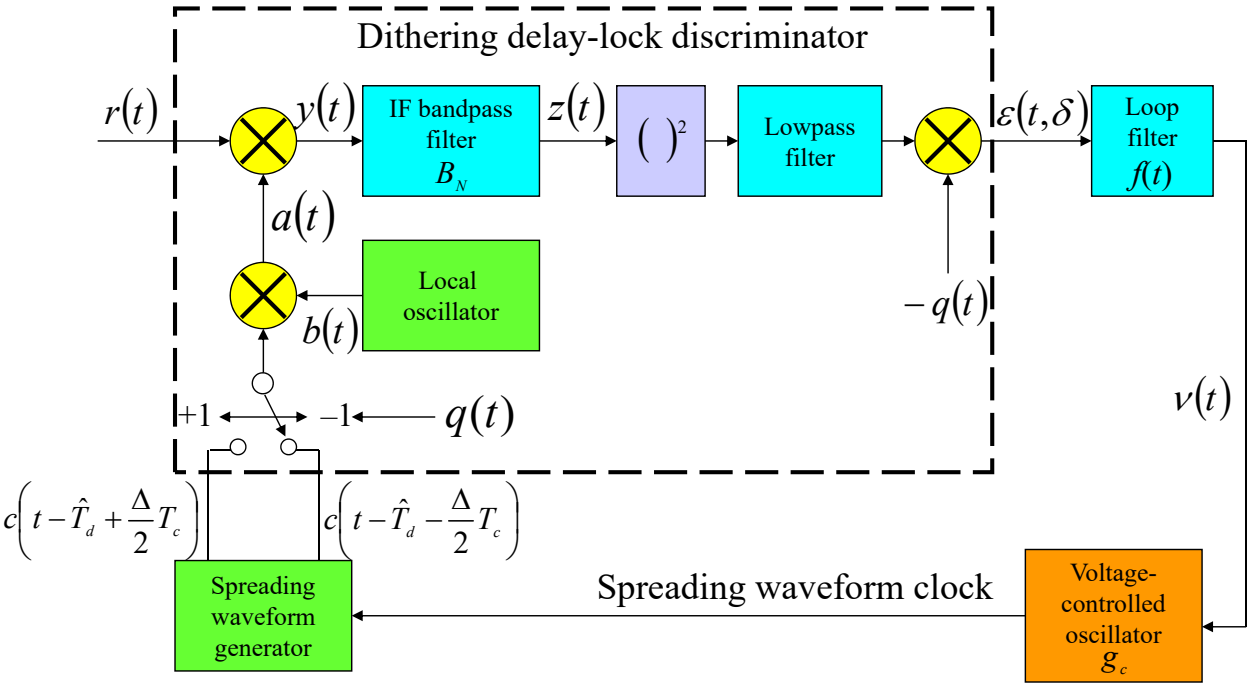

Tau-Dither Noncoherent Tracking Loop (Cont.)

- The discriminator has **a single channel**:
  - Switched between use as an **early** correlator and use as a **late** correlator by a **switching signal *q*(*t*)**
  - The signal $q(t)$ is a square wave of frequency f_q which takes on values of ±1
    - When $q(t) = -1$, the correlator functions as a **late** correlator
    - When $q(t) = +1$, the correlator functions as a **early** correlator
  - The signal $q(t)$ is also used to multiply the **squaring circuit output**

Tau-Dither Noncoherent Tracking Loop (Cont.)

- The input signal to the tau-dither loop is

$$r(t) = \sqrt{2P}c(t - T_d)\cos[(\omega_0 t + \theta_d(t - T_d) + \phi] + n(t)$$

$$n(t) = \sqrt{2}n_I(t)\cos\omega_0(t) - \sqrt{2}n_Q(t)\sin\omega_0(t)$$

- The reference local oscillator output is

$$b(t) = 2\sqrt{K_1}\cos[(\omega_0 - \omega_{IF})t + \phi']$$

$$a(t) = 2\sqrt{K_1}c\left(t - \hat{T}_d + q(t)\frac{\Delta}{2}T_c\right)\cos[(\omega_0 - \omega_{IF})t + \phi']$$

- An equivalent two-channel discriminator: Fig. 4-15
  - The output is switched between the early and late channels by $q_1(t) = \frac{1}{2}[1 + q(t)]; \quad q_2(t) = \frac{1}{2}[1 - q(t)]$

Equivalent Tau-Dither Noncoherent DLL

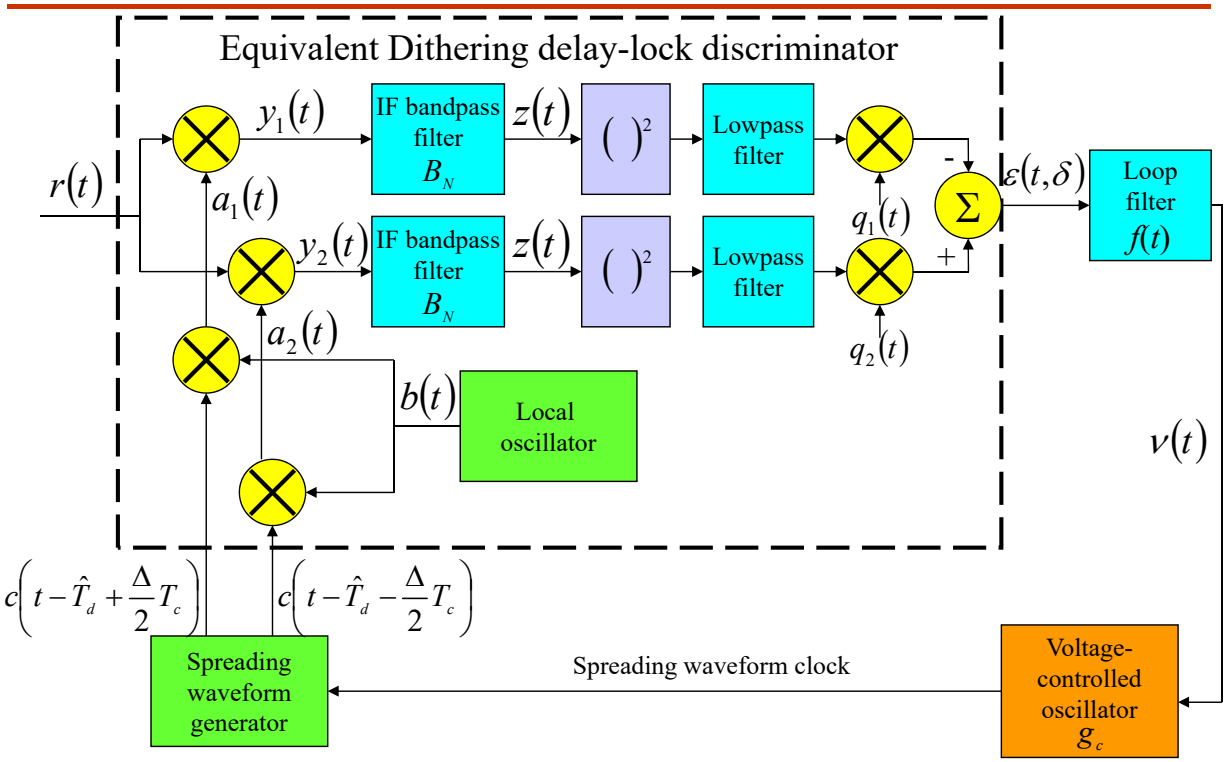

Dithering Loop Switching Functions

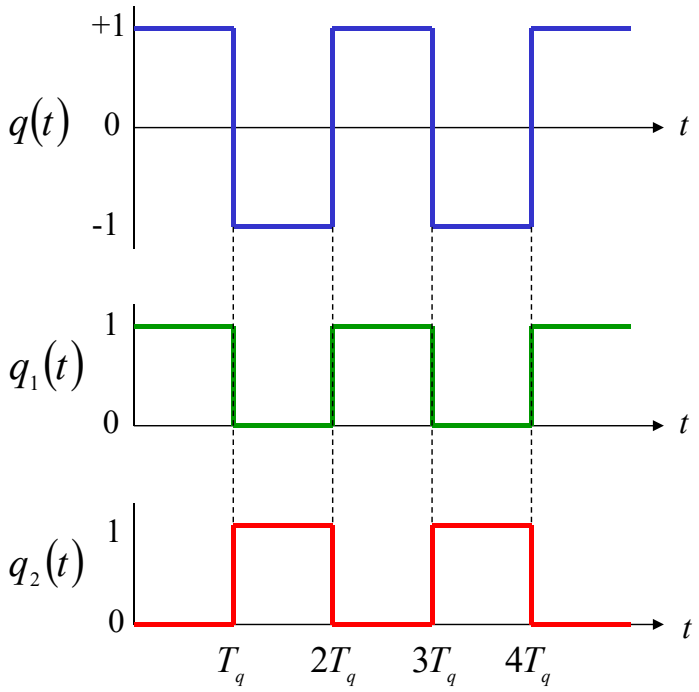

Tau-Dither Noncoherent Tracking Loop (Cont.)

$$a_1(t) = 2\sqrt{K_1}c(t - \hat{T}_d + \frac{\Delta}{2}T_c)\cos[(\omega_0 - \omega_{IF})t + \phi']$$

$$a_2(t) = 2\sqrt{K_1}c(t - \hat{T}_d - \frac{\Delta}{2}T_c)\cos[(\omega_0 - \omega_{IF})t + \phi']$$

- The mixer output signals are

$$y_1(t) \cong \sqrt{2K_1P}R_c\left[(\delta + \frac{\Delta}{2})T_c\right]\cos[\omega_{IF}t + \phi - \phi' + \theta_d(t - T_d)] \equiv x_1(t)$$

$$y_2(t) \cong \sqrt{2K_1P}R_c\left[(\delta - \frac{\Delta}{2})T_c\right]\cos[\omega_{IF}t + \phi - \phi' + \theta_d(t - T_d)] \equiv x_2(t)$$

Tau-Dither Noncoherent Tracking Loop (Cont.)

- The signal component of the delay-lock discriminator output is:

$$\varepsilon(t,\delta) = \left[x_2^2(t) q_2(t) - x_1^2(t) q_1(t) \right]_{\text{lowpass}}$$

$$= \left\{ \frac{1}{2}\left[x_2^2(t) - x_1^2(t) \right] - \frac{1}{2} q(t) \left[x_2^2(t) + x_1^2(t) \right] \right\}_{\text{lowpass}}$$

$$= \frac{1}{2} K_1 P \left\{ R_c^2 \left[(\delta - \frac{\Delta}{2}) T_c \right] - R_c^2 \left[(\delta + \frac{\Delta}{2}) T_c \right] \right\}$$

$$- \frac{1}{2} q(t) K_1 P \left\{ R_c^2 \left[(\delta - \frac{\Delta}{2}) T_c \right] + R_c^2 \left[(\delta + \frac{\Delta}{2}) T_c \right] \right\}$$

- The first term is identical to that of a **Noncoherent Delay-Lock Tracking Loop** (4-50) and is the desired tracking error

Tau-Dither Noncoherent Tracking Loop (Cont.)

- The second term consists of harmonics of the **dithering frequency**
- If the dithering frequency is significantly **higher** than the bandwidth of the loop filter
  - The second term is rejected by the loop filter

$$\varepsilon(t,\delta) \cong \frac{1}{2} K_1 P \left\{ R_c^2 \left[(\delta - \frac{\Delta}{2}) T_c \right] - R_c^2 \left[(\delta + \frac{\Delta}{2}) T_c \right] \right\}$$

$$\equiv \frac{1}{2} K_1 P D_\Delta(\delta)$$

Double-Dither Noncoherent Tracking Loop

Double-Dither Noncoherent Tracking Loop

- In certain applications, the **noise performance** degradation of the TDL loop relative to DLL is **unacceptable**
- The double-dither noncoherent tracking loop
  - It can solve the **gain-imbalance** problem of the DLL
  - The noise performance is **the same** as the DLL
  - The price paid is increased **hardware complexity**
- Two channels are used in the double-dither tracking loop
- The use of each channel **alternates** between **early** and **late** channel correlation

Block Diagram of Double-Dither DLL

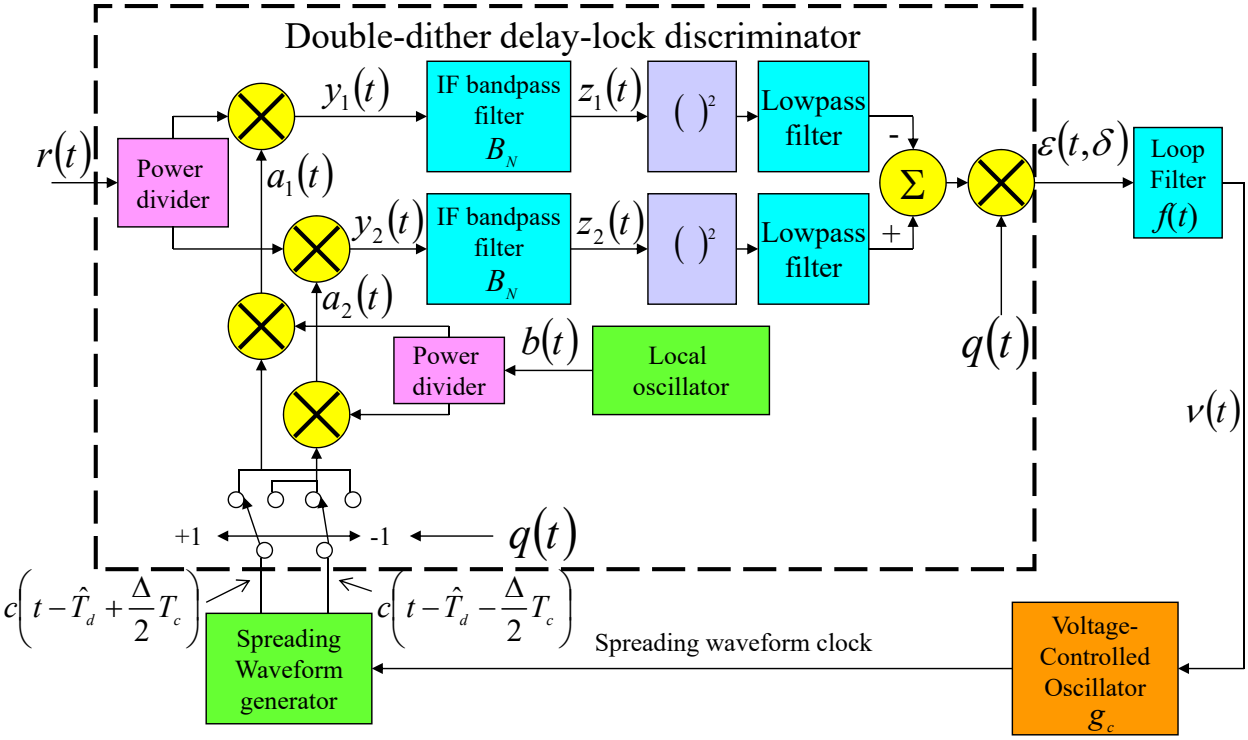

Code Tracking Loops for FH Systems

Code Tracking Loops for FH Systems

- The noncoherent DLL can also be used in a frequency-hopping spread-spectrum system
  - Use the block diagram of noncoherent DLL in a direct sequence spread-spectrum system, but with
    - The phase modulators are replaced with **frequency synthesizers**
    - The spreading waveform generator is replaced with a **spreading code generator** (the output is a digital signal which controls the frequency of the synthesizer)

Block Diagram of Noncoherent DLL for FHSS

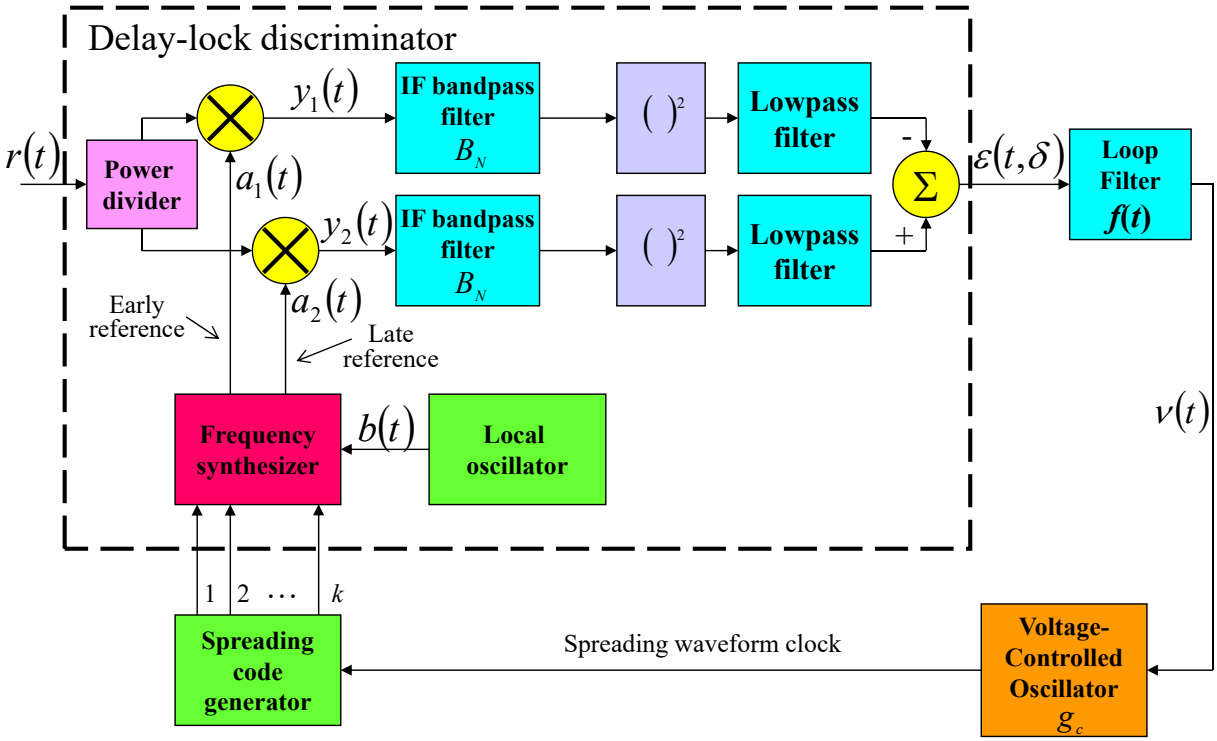

Code Tracking Loops for FH Systems (Cont.)

- The received signal is

$$r(t)=\sqrt{2P}\cos\left[\omega_0 t+\sum_{n=-\infty}^{\infty}(\omega_n t+\phi_n)p_{T_c}(t-T_d-nT_c)+\theta_d(t-T_d)\right]$$
$$+\sqrt{2}n_I(t)\cos\omega_0 t-\sqrt{2}n_Q(t)\sin\omega_0 t$$

  - $(\omega_0+\omega_n)$ is the transmission frequency during time interval n
  - ϕ_n is the frequency synthesizer random phase
  - $\theta_d(t)$ is the arbitrary data phase modulation
- The reference signal $a_1(t)$ and $a_2(t)$ are frequency hopped using the **same hop pattern** as used in the transmitter
  - **Offset** in phase from the receiver estimate of the transmission delay $\hat{T}_d$ by $\pm\Delta/2$ chip (a chip is the frequency-hop **dwell time** T_c)

Code Tracking Loops for FH Systems (Cont.)

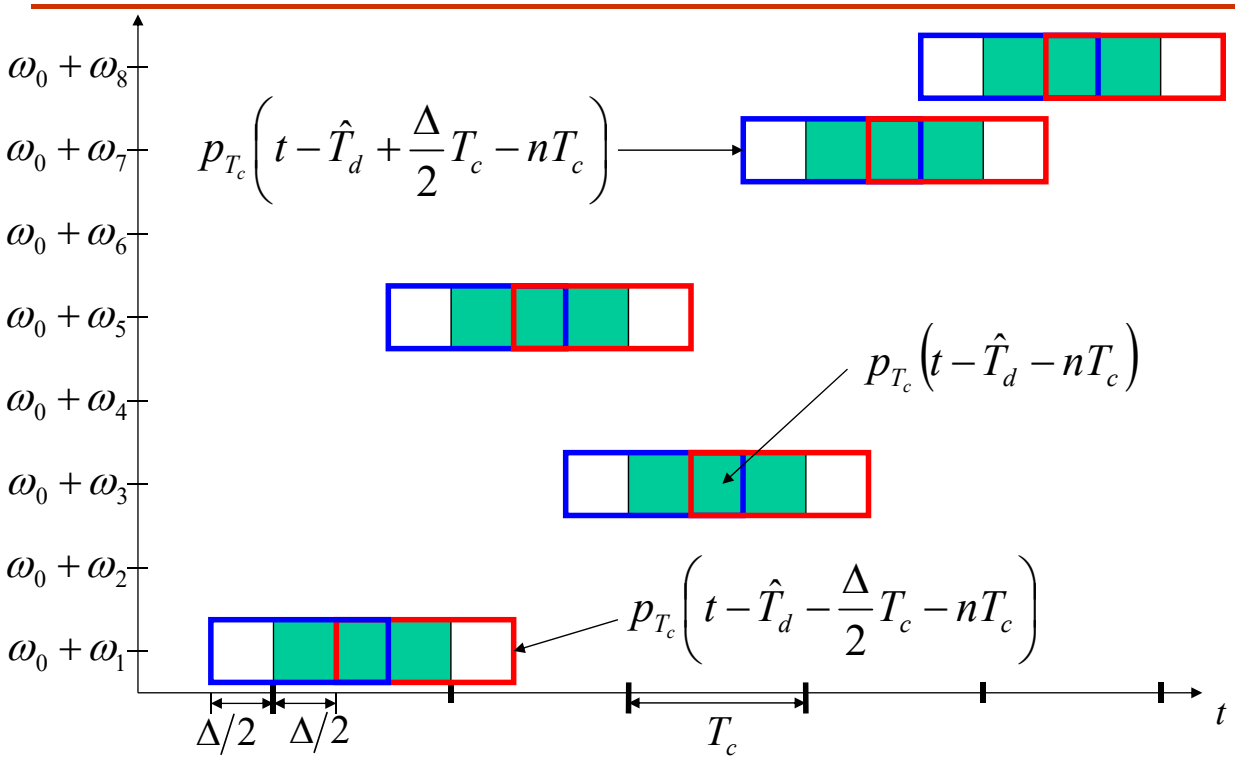

Code Tracking Loops for FH Systems (Cont.)

$$a_1(t) = 2\sqrt{K_1}\cos\left[(\omega_0+\omega_{IF})t + \sum_{n=-\infty}^{\infty}(\omega_n t+\phi'_n)\,p_{T_c}\left(t-\hat{T}_d+\frac{\Delta}{2}T_c-nT_c\right)\right]$$

$$a_2(t) = 2\sqrt{K_1}\cos\left[(\omega_0+\omega_{IF})t + \sum_{n=-\infty}^{\infty}(\omega_n t+\phi'_n)\,p_{T_c}\left(t-\hat{T}_d-\frac{\Delta}{2}T_c-nT_c\right)\right]$$

- K_1 is the mixer conversion loss
- ϕ'_n is the receiver frequency synthesizer random phase

Code Tracking Loops for FH Systems (Cont.)

- The channel mixer output signal is (the sum frequency terms will be **rejected by IF filter**)

$\cos(x-y)$ $\quad$ ~~$\cos(x+y)$~~ rejected

$$y_1(t) = \sqrt{K_1 P}\cos\left[\omega_{IF}t - \sum_{n=-\infty}^{\infty}(\omega_n t+\phi_n)\,p_{T_c}(t-T_d-nT_c) - \theta_d(t-T_d) + \sum_{m=-\infty}^{\infty}(\omega_m t+\phi'_m)p_{T_c}\left(t-\hat{T}_d+\frac{\Delta}{2}T_c-mT_c\right)\right]$$
$$+\sqrt{K_1}n_I(t)\cos\left[\omega_{IF}t+\sum_{n=-\infty}^{\infty}(\omega_n t+\phi'_n)p_{T_c}\left(t-\hat{T}_d+\frac{\Delta}{2}T_c-nT_c\right)\right]$$
$$-\sqrt{K_1}n_Q(t)\sin\left[\omega_{IF}t+\sum_{n=-\infty}^{\infty}(\omega_n t+\phi'_n)p_{T_c}\left(t-\hat{T}_d+\frac{\Delta}{2}T_c-nT_c\right)\right]$$

Code Tracking Loops for FH Systems (Cont.)

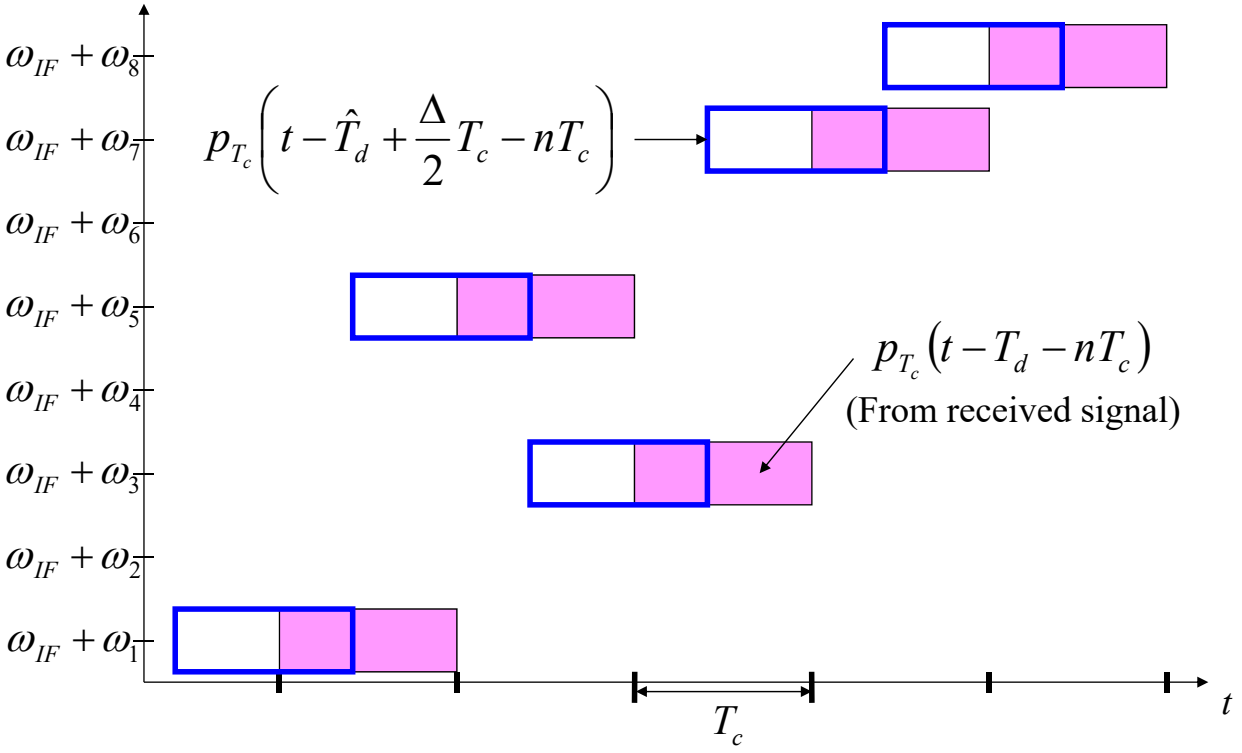

Code Tracking Loops for FH Systems (Cont.)

- The signal component is centered on the IF only when
  - $p_{T_c}(t-T_d-nT_c)$ and $p_{T_c}\left(t-\hat{T}_d+(\Delta/2)T_c-mT_c\right)$ **overlap**
  - Overlap occurs on **every hop interval**
- When **no overlap** occurs, the signal component is translated to a frequency that **will not** pass the IF filter (**can be ignored**)
- The signal component may be replaced by an **equivalent** pulsed signal:

$$y_1'(t)=\sqrt{K_1P}\sum_{n=-\infty}^{\infty}p_{T_c}(t-T_d-nT_c)\,p_{T_c}\left(t-\hat{T}_d+\frac{\Delta}{2}T_c-nT_c\right)$$
$$\times\cos\left[\omega_{IF}t-(\phi_n-\phi_n')-\theta_d(t-T_d)\right]$$
$$+\sqrt{K_1}n_{1I}(t)\cos\omega_{IF}t-\sqrt{K_1}n_{1Q}(t)\sin\omega_{IF}t$$

Code Tracking Loops for FH Systems (Cont.)

$$y_2'(t) = \sqrt{K_1 P}\sum_{n=-\infty}^{\infty} p_{T_c}\left(t - T_d - nT_c\right) p_{T_c}\left(t - \hat{T}_d - \frac{\Delta}{2}T_c - nT_c\right)$$
$$\times \cos\left[\omega_{IF}t - \left(\phi_n - \phi_n'\right) - \theta_d\left(t - T_d\right)\right]$$
$$+ \sqrt{K_1}\, n_{2I}(t)\cos\omega_{IF}t - \sqrt{K_1}\, n_{2Q}(t)\sin\omega_{IF}t$$

- The Δ is limited to 1.0 $\Rightarrow$ the early and late reference signals are **never** simultaneously at the same frequency

  $\Rightarrow$ The early and late channel **noise processes** come from different band and are therefore **independent**

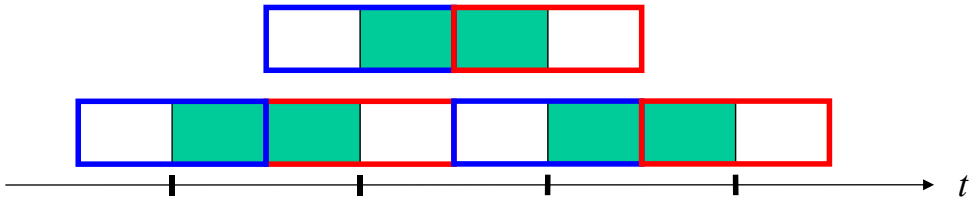

Early Channel Mixer Input

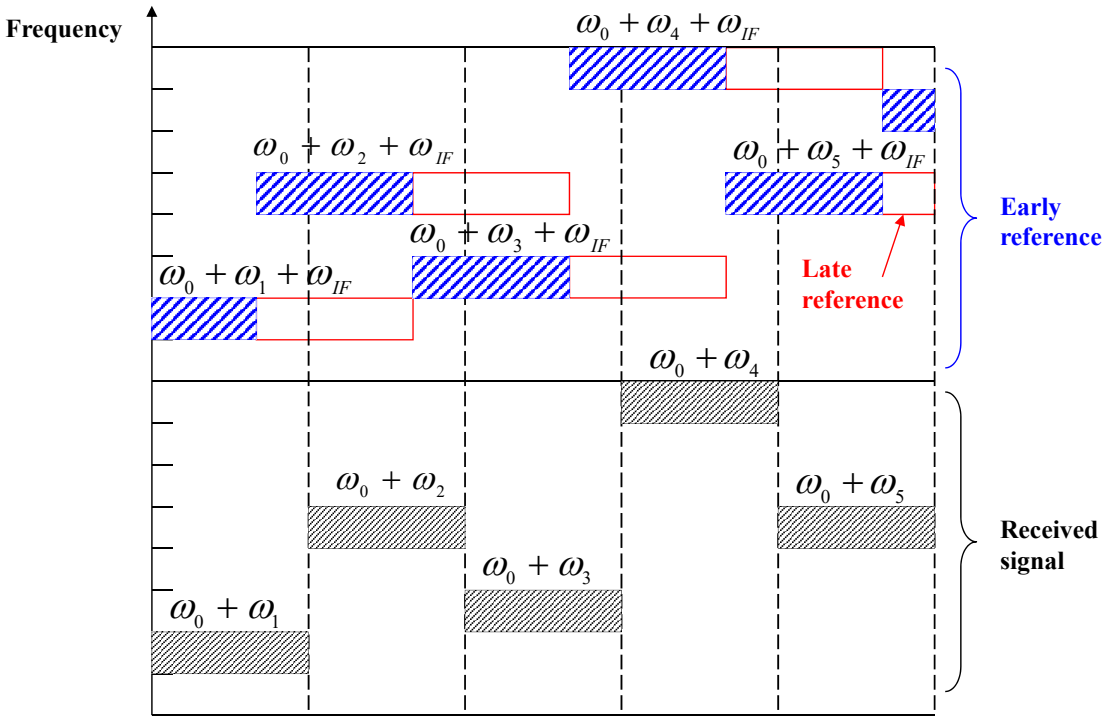

Early Channel Mixer Output

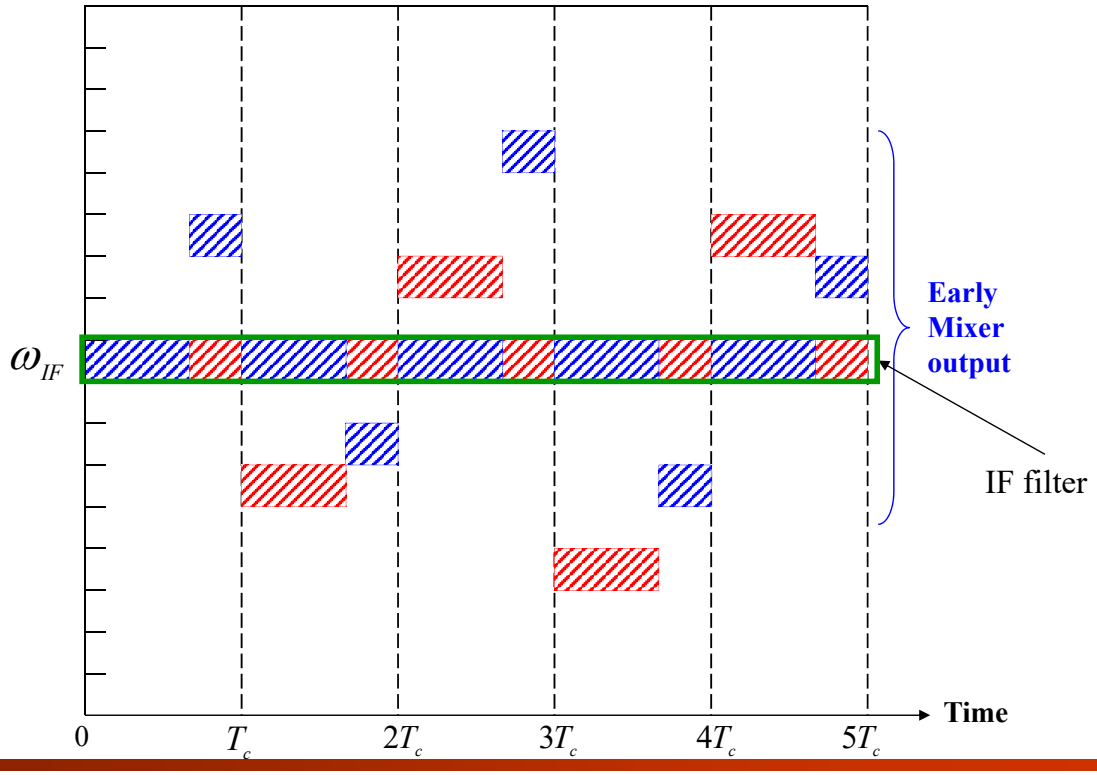

Code Tracking Loops for FH Systems (Cont.)

- The discriminator output is

$$\varepsilon(t,\delta) = \frac{1}{2}K_1 P\left[\sum_{n=-\infty}^{\infty} p_{T_c}\left(t - T_d - nT_c\right)p_{T_c}\left(t - \hat{T}_d - \frac{\Delta}{2}T_c - nT_c\right)\right.$$
$$\left. - \sum_{m=-\infty}^{\infty} p_{T_c}\left(t - T_d - mT_c\right)p_{T_c}\left(t - \hat{T}_d + \frac{\Delta}{2}T_c - mT_c\right)\right]$$
$$+\sqrt{2K_1 P}\cos\left[\theta_d\left(t - T_d\right)\right]\left[n_{2I}^0(t)\beta_1(t) - n_{1I}^0(t)\beta_2(t)\right]$$
$$+\sqrt{2K_1 P}\sin\left[\theta_d\left(t - T_d\right)\right]\left[n_{2I}^0(t)\beta_3(t) - n_{1I}^0(t)\beta_4(t)\right]$$
$$+\sqrt{2K_1 P}\sin\left[\theta_d\left(t - T_d\right)\right]\left[n_{2Q}^0(t)\beta_1(t) - n_{1Q}^0(t)\beta_2(t)\right]$$
$$-\sqrt{2K_1 P}\cos\left[\theta_d\left(t - T_d\right)\right]\left[n_{2Q}^0(t)\beta_3(t) - n_{1Q}^0(t)\beta_4(t)\right]$$
$$+\left[n_{2I}^0(t)\right]^2 + \left[n_{2Q}^0(t)\right]^2 - \left[n_{1I}^0(t)\right]^2 - \left[n_{1Q}^0(t)\right]^2$$

Code Tracking Loops for FH Systems (Cont.)

- The DC component is

$$\varepsilon(t,\delta)=\frac{1}{2}K_1P\left\{R_{FH}\left[\left(\delta-\frac{1}{2}\right)T_c\right]-R_{FH}\left[\left(\delta+\frac{1}{2}\right)T_c\right]\right\}+n_s(t)$$
$$+\sqrt{2K_1P}\cos\left[\theta_d\left(t-T_d\right)-\phi(t)\right]n_{1I}^0(t)$$
$$+\sqrt{2K_1P}\sin\left[\theta_d\left(t-T_d\right)-\phi(t)\right]n_{1Q}^0(t)$$
$$+\left[n_{2I}^0(t)\right]^2+\left[n_{2Q}^0(t)\right]^2-\left[n_{1I}^0(t)\right]^2-\left[n_{1Q}^0(t)\right]^2$$

  - where

$$R_{FH}(\tau)=\begin{cases}0 & \text{for } \tau<-T_c\\ \dfrac{\tau}{T_c}+1.0 & \text{for } -T_c\le\tau<0\\ -\dfrac{\tau}{T_c}+1.0 & \text{for } 0\le\tau<T_c\\ 0 & \text{for } T_c\le\tau\end{cases}$$

Normalized S-curve for the Noncoherent CTL

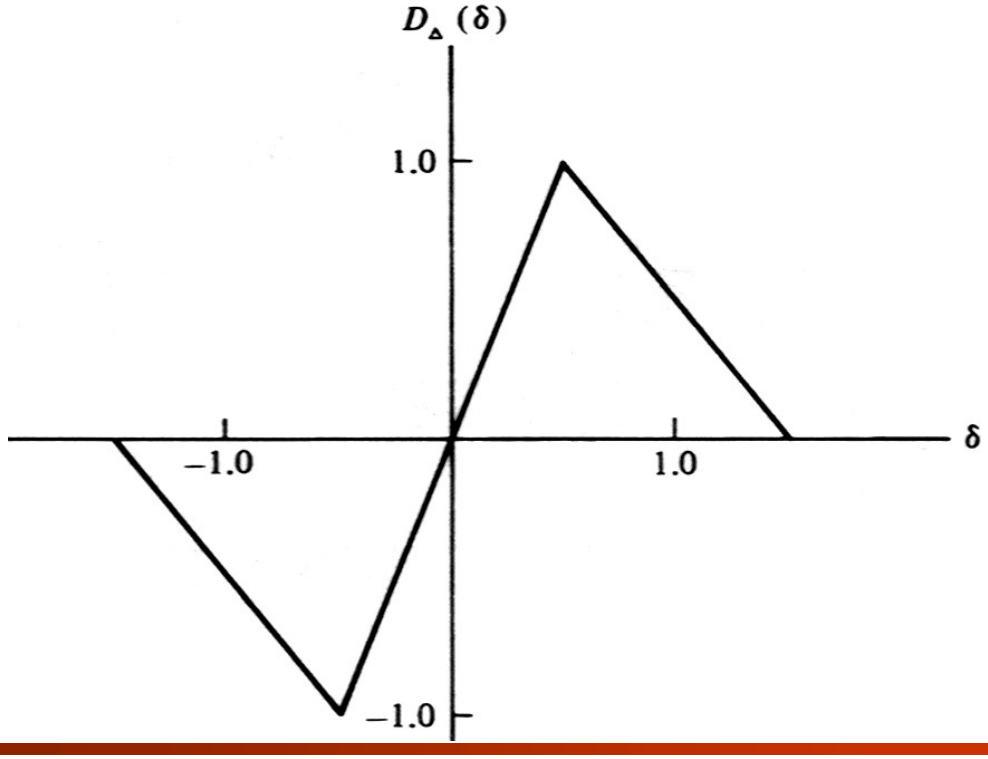

Block Diagram of Noncoherent DLL (Slow FH)

- For a slow FH system, the dithering concept can be used
  - To solve the **gain-imbalance** problem of the DLL and
  - To reduce the **hardware complexity**

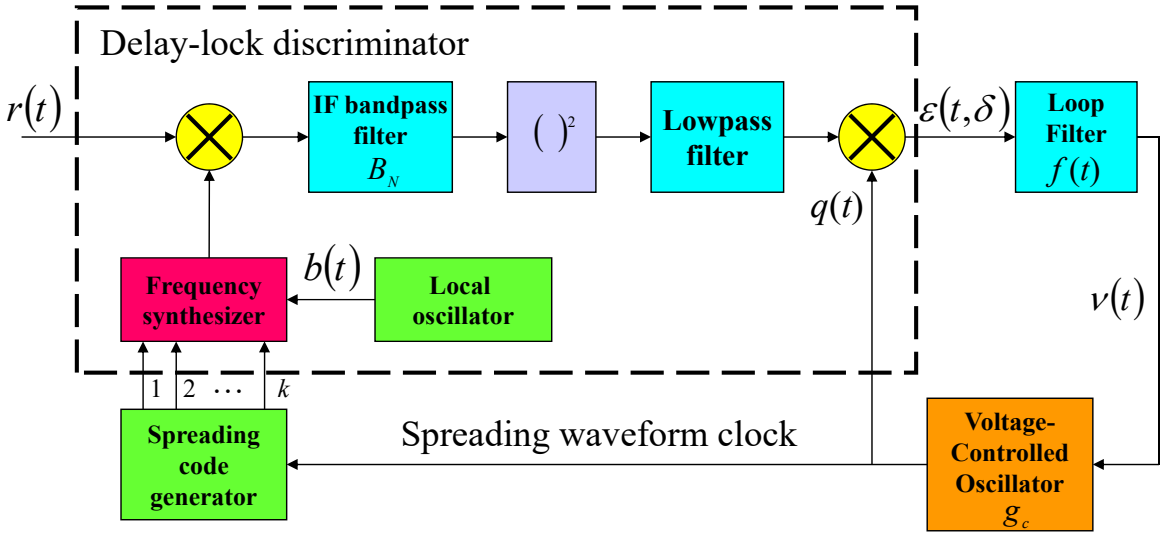

Dehopping Mixer Input

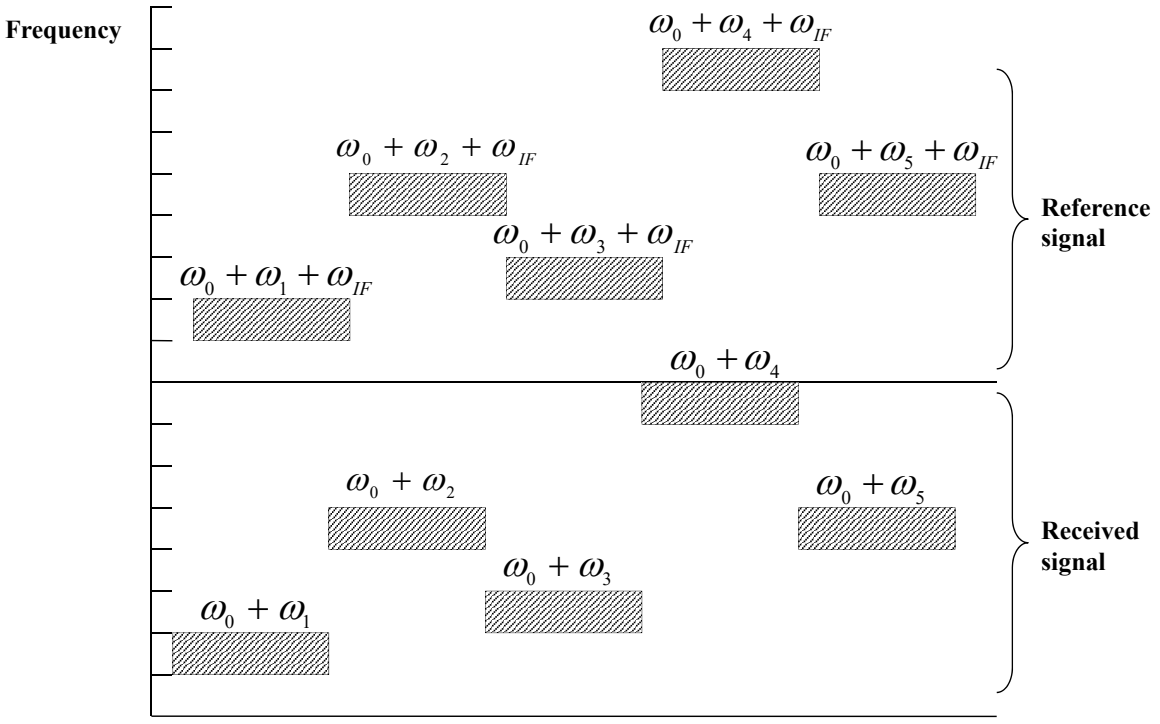

Dehopping Mixer Output

