# 展頻通訊
# (Spread Spectrum Communications)

國立清華大學電機系暨通訊工程研究所
蔡育仁
台達館 821 室
Tel: 62210
E-mail: yrtsai@ee.nthu.edu.tw



# Chapter 5
# Initial Synchronization

# Contents

- Introduction
- Optimum Synchronizer
- Serial-Search Synchronization
- Generalized Analysis of Average Synchronization Time
- Synchronization Using Matched Filter



# Introduction

- **Serial search** is a widely used technique for initial synchronization:
  - **Search serially** through **all** potential code phases until the correct phase is identified
  - Each reference phase is evaluated by attempting to **despread** the received signal
  - If the estimated code phase is **correct**, despreading will occur and **will be sensed**
  - If the estimated code phase is **incorrect**, the received signal will not be despread
    - Then, the reference waveform will be stepped to a **new phase** for evaluation

# Introduction (Cont.)

- The probability that the detector indicates that the trial phase is correct when, **in fact, it is not**
  - The probability of **false alarm** $P_{fa}$
- The probability that the detector indicates that the trial phase is correct when **it is indeed correct**
  - The probability of **correct detection** $P_d$
- $P_{fa}$ and $P_d$ are a function of **evaluation (integration) time** and **signal-to-noise ratio**



# Serial Search／Matched Filter Detection

- **Serial-search** acquisition schemes are referred to as **low-decision-rate detectors**
  - A **large** number of spreading code symbols must be received to make a correct/incorrect decision
- **Matched filter detection** is a highly efficient method of initial synchronization
  - When **a particular sequence of code symbols** is received, the matched filter will output a pulse
  - Require matched filters with extremely **large time-bandwidth products**

# Rapid Acquisition

- **Rapid acquisition** by sequential estimation (**RASE**):
  - The DSSS system should employ BPSK spreading
  - The spreading code is an *m*-sequence generated using the **generator of Fig. 3-6**
  - **Demodulate** the received symbol **(chip)** stream directly and **load** the shift register generator with this symbol stream

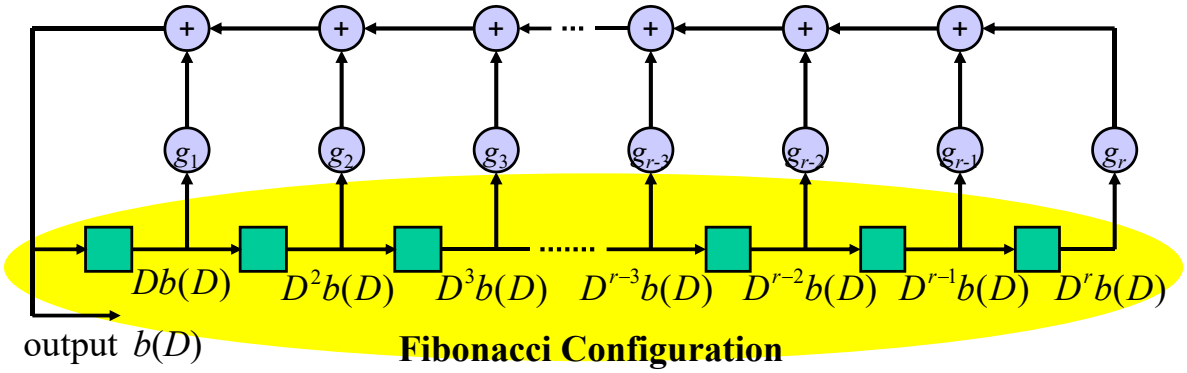




# Rapid Acquisition (Cont.)

- **At very high SNR**: the demodulated symbols **(chips)** are correct

  $\Rightarrow$ The shift register initial condition is also correct
- **At reduced SNR**: the shift register load may not be correct

  $\Rightarrow$ Additional loads will have to be attempted

# Initial Synchronization Complexity

- The number of **code phases** and **frequencies** that must be evaluated to obtain initial synchronization is proportional to:
  - **Propagation delay uncertainty**: expressed in spreading code chips
    - Induce **code phase** uncertainty
  - **Relative dynamics** of the transmitter and the receiver: Doppler effect
    - Induce **frequency** and **code phase** uncertainty
- The initial synchronization techniques are generally capable of determining the received spreading code phase to within an accuracy of **±½ to ± ¼ of a chip**



# Initial Synchronization Complexity (Cont.)

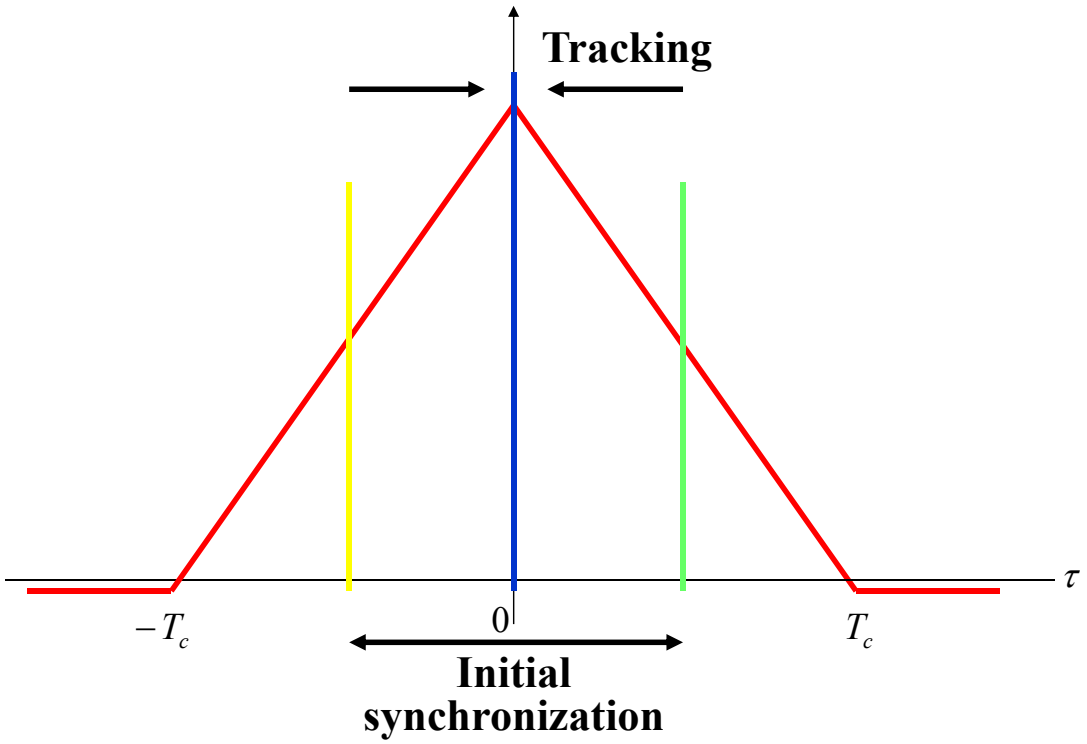

# Optimum Synchronizer



# Functional Blocks of Synchronizer

- Assume that the **phase uncertainty** is bounded to a range of $\Delta T$ seconds and the **frequency uncertainty** is bounded to a range of $\Delta\Omega$ rad/sec
- A simplified conceptual block diagram to evaluate a **single** reference phase and frequency is

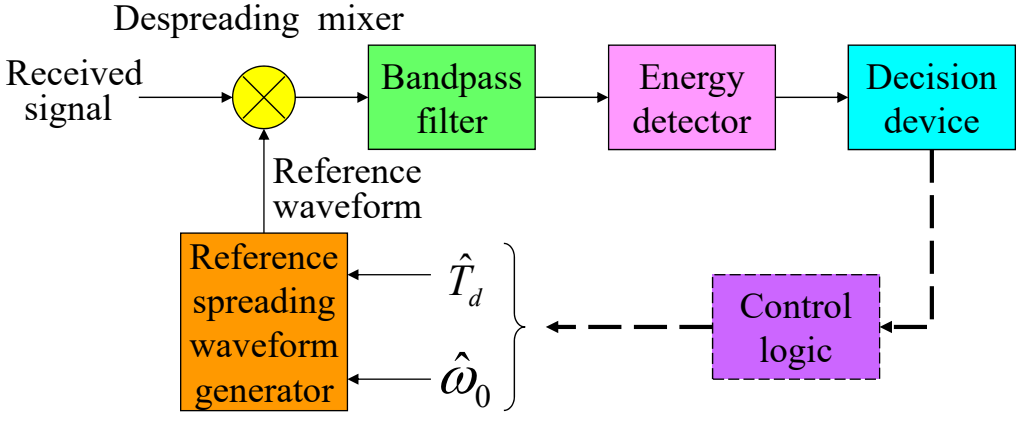

# Functional Blocks of Synchronizer (Cont.)

- If the phase and frequency of the receiver-generated replica of the spreading waveform are correct:
  - The energy detector will detect the presence of the signal
- The **control logic** is used to select the values of $\hat{T}_d$ and $\hat{\omega}$ for evaluation



# Synchronization Detection

- Suppose that the received signal $r(t)$ is a carrier which is BPSK modulated by an $m$-sequence waveform $c(t - T_d)$ plus AWGN

$$r(t) = c(t - T_d)\cos(\omega_0 t + \phi) + n(t)$$

  - where $\omega_0$ is the carrier frequency and $\phi$ is the carrier phase
- The reference waveform is:

$$a(t) = c(t - \hat{T}_d)\cos[(\hat{\omega}_0 + \omega_{IF})t]$$

- The despreader output (difference frequency term) is:

$$x(t) = c(t - T_d)c(t - \hat{T}_d)\cos[\omega_{IF}t + (\hat{\omega}_0 - \omega_0)t - \varphi] + n'(t)$$

# Synchronization Detection (Cont.)

- The power spectrum of $c(t-T_d)c(t-\hat{T}_d)$ is: $\varepsilon = T_d - \hat{T}_d$

$$S_b(f,\varepsilon) = \left[1-\left(1+\frac{1}{N}\right)\frac{|\varepsilon|}{T_c}\right]^2 \delta(f) + \left(1+\frac{1}{N}\right)\left(\frac{|\varepsilon|}{T_c}\right)^2 \sum_{n=-\infty, n\neq 0}^{\infty} \mathrm{sinc}^2\left(nf_c|\varepsilon|\right)\delta\left(f-nf_c\right) + \frac{N+1}{N^2}\left(\frac{|\varepsilon|}{T_c}\right)^2 \sum_{m=-\infty, m\neq 0}^{\infty} \mathrm{sinc}^2\left(\frac{mf_c}{N}|\varepsilon|\right)\delta\left(f-\frac{mf_c}{N}\right)$$

$$R_c(\tau) = 1-\left(1+\frac{1}{N}\right)\times\frac{|\tau|}{T_c}, \quad 0 \le \tau \le T_c$$

- For $\varepsilon = 0$: a single spectral line at **zero frequency**
- For $\varepsilon = T_c$: a phase-shifted replica of $c(t)$, so $S_b(f, \varepsilon) = S_c(f)$
- For $\varepsilon \neq 0$ or $T_c$: significantly **wider** than the spectrum of $c(t)$
  - $b(t,\varepsilon) = c(t-T_d)c(t-\hat{T}_d)$ **transits more rapidly** than $c(t)$



# Synchronization Detection (Cont.)

- The power spectrum of $c(t-T_d)c(t-\hat{T}_d)$ contains an impulse at zero frequency which corresponds to a single spectral line
  - at $\omega = \omega_{IF} + \hat{\omega}_0 - \omega_0$ and with power

$$R_c^2(\tau),\ \tau = \hat{T}_d - T_d$$

  - If $\tau$ is **sufficiently small** (large enough power) and $\hat{\omega}_0 - \omega_0$ is not larger than the bandwidth of the bandpass filter:
    - This component will be sensed by the energy detector
- The phase/frequency uncertainty region is assumed to be $\Delta\Omega \times \Delta T$
  - Subdivided the region into some smaller cells $\Delta\omega \times \Delta t$
  - A single test in each cell will be sufficient to determine the correct received phase and frequency

# Optimum Synchronizer

- An **optimum** initial synchronization system (in the sense that it achieves synchronization **in the minimum possible time**):
  - It evaluates **all cells** within a possible range **simultaneously**

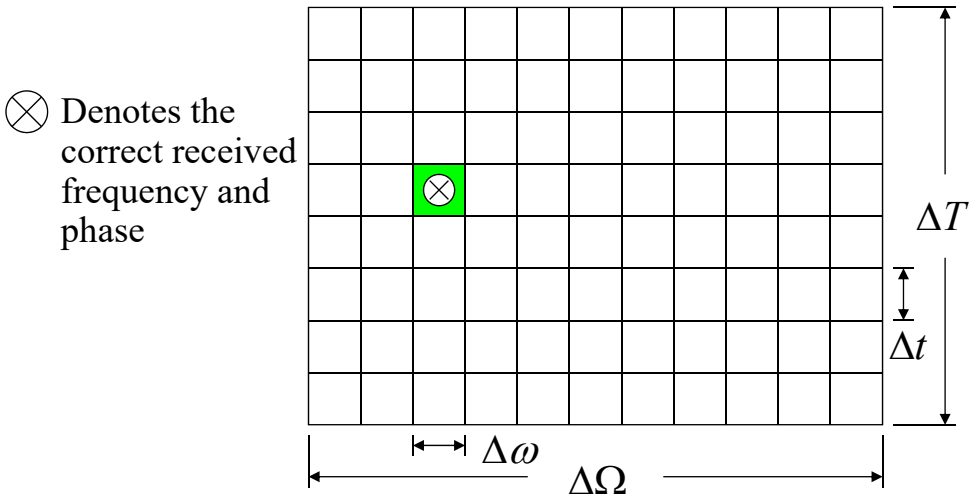




# Optimum Synchronizer (Cont.)

- An **minimum-acquisition-time** system requires a evaluating subsystem for every phase/frequency cell
  - It is **not optimum** in a **minimum-hardware sense**
  - It is rarely implemented because of its hardware complexity
- An initial synchronization system is designed to achieve a **compromise** between acquisition time and reasonable hardware complexity
- Synchronization time is proportional to the **total number of cells** that must be evaluated
  - It makes no difference whether these cells were all generated from frequency uncertainty or all from phase uncertainty or a combination

# Neyman–Pearson Hypothesis Testing Concept



## Binary Hypothesis Testing Problem

- Binary hypothesis testing problem: Either one or the other hypothesis is true.
  - Correct code phase or Incorrect code phase
- The probabilities of the decision errors depend on the selected **decision criterion**.

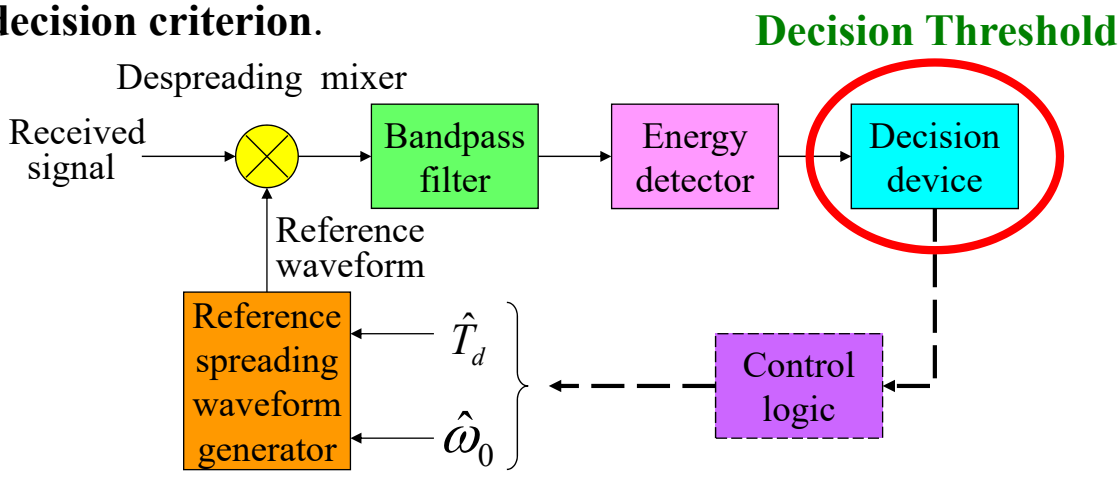

# Acquisition Problem

- For acquiring synchronization, the problem is whether the synchronization is achieved or not.
- Define hypothesis $\boldsymbol{H_1}$ as synchronization being achieved and $\boldsymbol{H_0}$ as synchronization being absent.
- Assumes that the process $r(t)$ is observed in some time interval.
  - It also assumes that the **conditional probability distributions** of the process $r(t)$ are **known** for the observations under the two hypotheses.
  - The distribution is due to the existence of **noise/interference**
- There are two kinds of **decision error probabilities**:
  - The probability to accept hypothesis $\boldsymbol{H_1}$ when $\boldsymbol{H_0}$ is true
  - The probability to accept hypothesis $\boldsymbol{H_0}$ when $\boldsymbol{H_1}$ is true



# Binary Hypothesis Testing

- When the hypothesis $\boldsymbol{H_1}$ is desired (acquire synchronization)
  - The probability of accepting hypothesis $\boldsymbol{H_1}$ when $\boldsymbol{H_0}$ is true is called the **false alarm probability** $P_{fa}$.
  - The probability of accepting hypothesis $\boldsymbol{H_0}$ when $\boldsymbol{H_1}$ is true is called the **probability of a miss** $P_{miss}$.
- The **probability of detection** is denoted as $P_d = 1 - P_{miss}$.
- In general, we should like to make $P_{fa}$ as **low** as possible and $P_d$ as **high** as possible ($P_{miss}$ as **low** as possible).
  - For most problems of practical importance these are **conflicting** objectives ($P_d\uparrow \Rightarrow P_{fa}\uparrow$; $P_{fa}\downarrow \Rightarrow P_d\downarrow$).
  - An obvious approach is to constrain one of the probabilities and to maximize (or to minimize) the other.

# Neyman–Pearson Hypothesis Testing

- The **Neyman–Pearson** criterion maximizes $P_d$ (or minimizes $P_{miss}$) under the constraint $P_{fa} \le \alpha$, where $\alpha$ is a pre-chosen constant.
- The solution is obtained easily by using **Lagrange multipliers**.
- We construct the function

$$\Phi = P_{miss} + \lambda\left(P_{fa} - \alpha\right)$$

**Penalty term**

$$= \int_{Z_0} p_1(z)\,dz + \lambda\left[\int_{Z_1} p_0(z)\,dz - \alpha\right]$$

$p_0(z)$: the pdf under $\boldsymbol{H_0}$
$p_1(z)$: the pdf under $\boldsymbol{H_1}$

- The total observation space $Z$ is divided into two parts, $Z_0$ and $Z_1$ (The space is divided by the **decision threshold**)
  - When an observation falls into $Z_0$: we say $\boldsymbol{H_0}$
  - When an observation falls into $Z_1$: we say $\boldsymbol{H_1}$



# Neyman–Pearson Hypothesis Testing (Cont.)

- If $P_{fa} = \alpha$, then minimizing $\Phi$ will minimize $P_{miss}$.
  - Because $\Phi = P_{miss} + \lambda(P_{fa} - \alpha)$
- Notice that

$$\Phi = \int_{Z_0} p_1(z)\,dz + \lambda\left[\int_{Z_1} p_0(z)\,dz - \alpha\right]$$

$$= \int_{Z_0} \left[p_1(z) - \lambda p_0(z)\right] dz + \lambda(1-\alpha).$$

- For a positive $\lambda$, to minimize $\Phi$, we assign a point (a received observation) $z$ to $Z_0$ only when $p_1(z) - \lambda p_0(z)$ is negative.
  - This is equivalent to the **likelihood ratio test**

$$H_0 : \Lambda(z) \triangleq \frac{p_1(z)}{p_0(z)} < \lambda; \quad H_1 : \Lambda(z) \triangleq \frac{p_1(z)}{p_0(z)} \ge \lambda$$

- The threshold $\lambda$ depends on the constraint on $P_{fa} = \alpha$.
  - Find $V_T$ corresponding to $\lambda$ such that $P_{fa} = \int_{V_T}^{\infty} p_0(z)\,dz = \alpha$

# Neyman–Pearson Hypothesis Testing (Cont.)

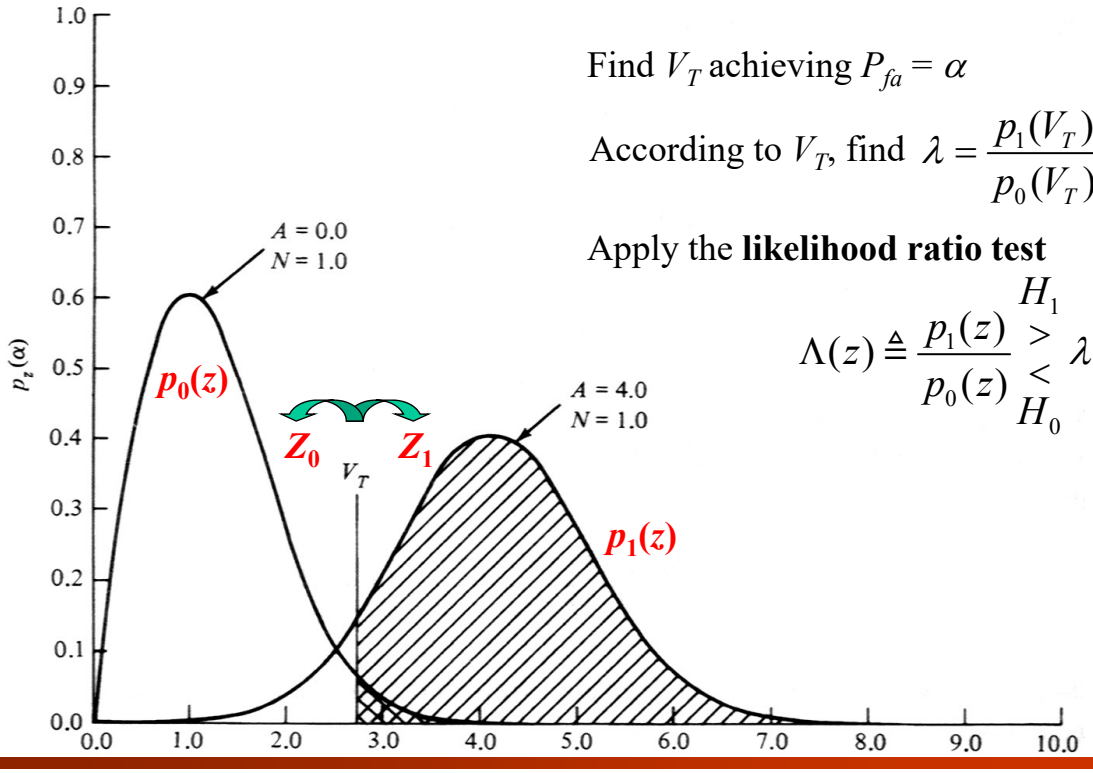


Find $V_T$ achieving $P_{fa} = \alpha$

According to $V_T$, find $\lambda = \dfrac{p_1(V_T)}{p_0(V_T)}$

Apply the **likelihood ratio test**

$$\Lambda(z) \triangleq \frac{p_1(z)}{p_0(z)} \underset{H_0}{\overset{H_1}{\gtrless}} \lambda$$



# Neyman–Pearson Hypothesis Testing (Cont.)

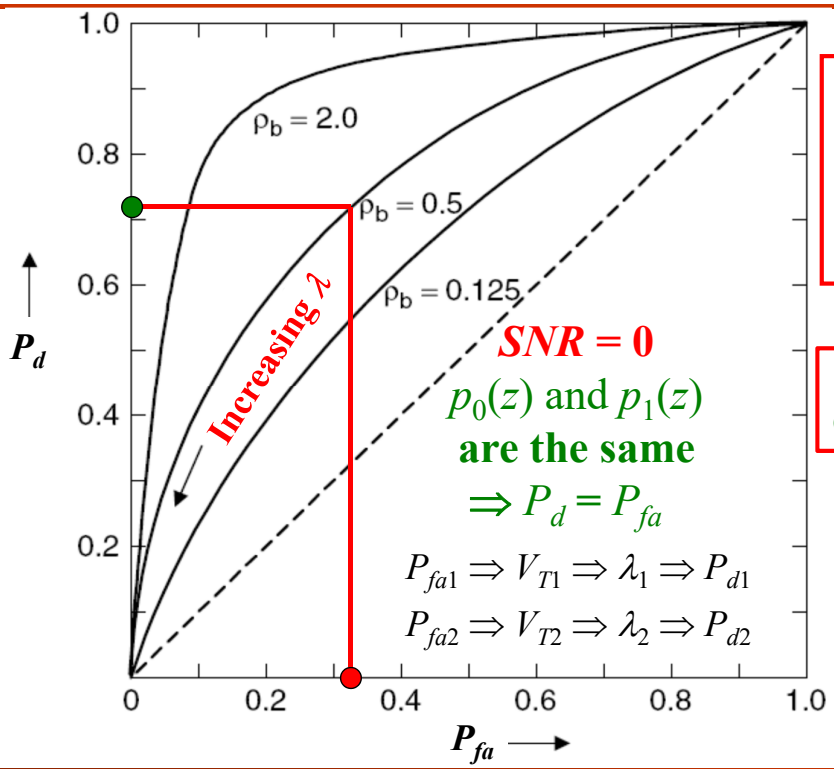


When $P_{fa1} < P_{fa2}$
$\Rightarrow V_{T1} > V_{T2}$
$\Rightarrow \lambda_1 > \lambda_2$
$\Rightarrow P_{d1} < P_{d2}$

**Receiver Operating Characteristic (ROC)**

***SNR* = 0**
$p_0(z)$ and $p_1(z)$ **are the same**
$\Rightarrow P_d = P_{fa}$

$P_{fa1} \Rightarrow V_{T1} \Rightarrow \lambda_1 \Rightarrow P_{d1}$
$P_{fa2} \Rightarrow V_{T2} \Rightarrow \lambda_2 \Rightarrow P_{d2}$

***Source:*** *Theory of Code Division Multiple Access Communication*, by Kamil Sh. Zigangirov

# Serial-Search Synchronization



## Serial-Search Synchronization

- Serial-search techniques are commonly used in SS synchronization
  - Evaluate the phase/frequency cells **serially** (one after another) until the correct cell is found
- Assume that **no frequency uncertainty** exists and the correct phase is uniformly distributed over the region $\Delta T$
  - A phase step size of $\Delta t$ seconds is chosen

  $\Rightarrow \Delta T/\Delta t = C$
  - The search will advance through **one cell at a time** until $C$ cells have been evaluated

# Serial-Search Synchronization (Cont.)

- The transmitted code sequence is generated with a constant rate
  - The phase of the received code sequence moves forward with a constant rate (i.e., the spreading code rate)
- The local generated code sequence is also generated with the same spreading code rate
- The code phase of a specific cell (e.g., the *i*-th cell) changes linearly with respect to time

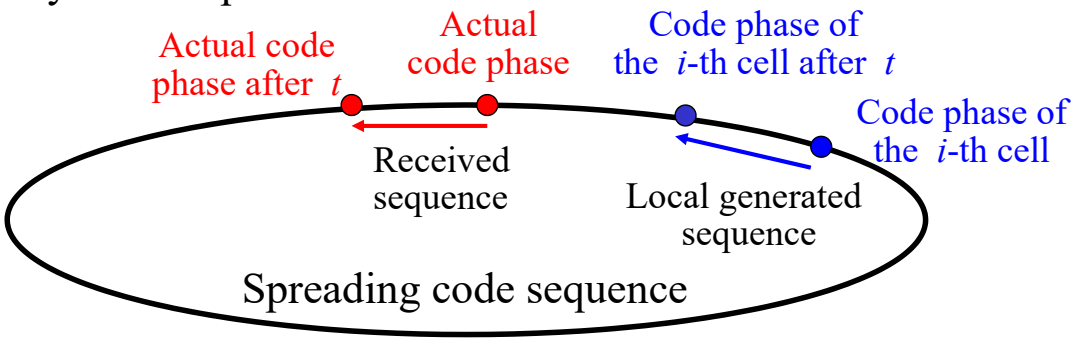




# Serial-Search Synchronization (Cont.)

- After the evaluation time duration of a cell (e.g., $T_i$) , the synchronizer advances to the next cell for generating the code sequence
  - The local sequence generator jumps to the code phase of the $(i + 1)$-th cell
  - A jump of a code phase equal to the phase step size of $\Delta t$ seconds

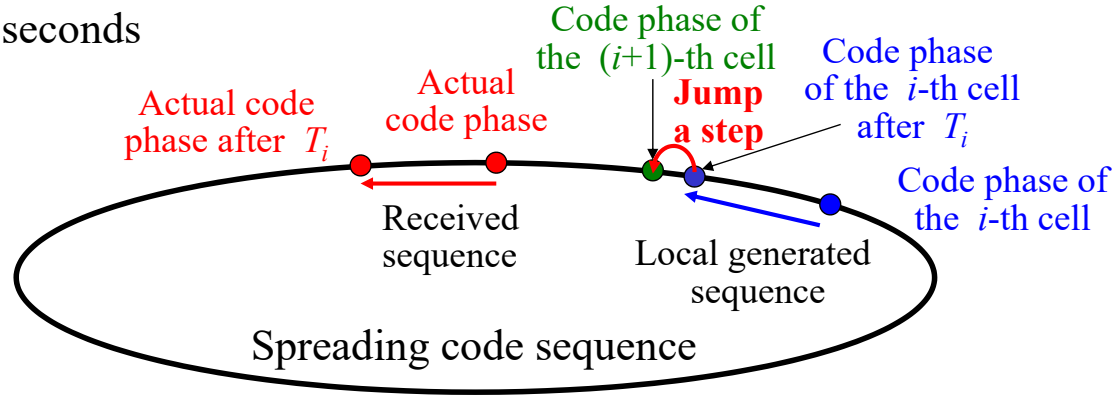

# Synchronization Time

- Define
  - $n$: a particular location for the **correct** phase cell
  - $j$: the number of **missed detections** of the correct phase cell
  - $k$: the number of **false alarms** in all **incorrect** phase cells
- The total synchronization time for a particular event is

$$T(n, j, k) = nT_i + jCT_i + kT_{fa}$$

  - $T_i$ is the (**fixed**) integration time for evaluation of each cell
  - $T_{fa}$ is the time required to reject an incorrect cell when a false alarm occurs
    - $T_{fa}$ may be many times **larger** than $T_i$



# Synchronization Time (Cont.)

- The total number of cells evaluated for this event is $(n + j\,C)$
- The total number of **correct** cells is $(j + 1)$
- The total number of **incorrect** cells is $(n + jC - j - 1)$

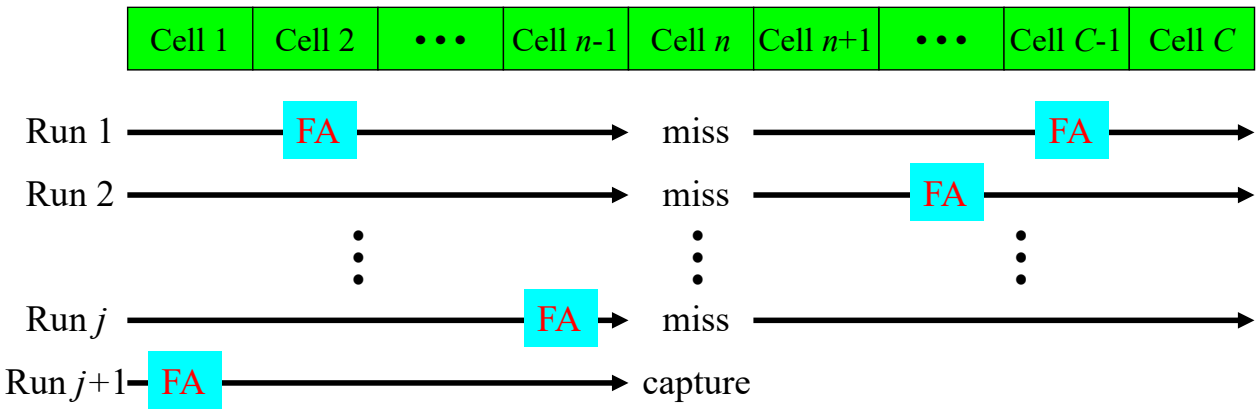

# Synchronization Time (Cont.)

- The probability of the correct cell being the $n$-th cell is

$$1/C$$

- The probability of $j$ missed detections followed by a correct detection is

$$P_d(1-P_d)^j$$

- The $k$ false alarms can occur in any order within the incorrect cells

$$(n+jC-j-1) \triangleq K$$

  - The probability of a particular ordering:

$$P_{fa}^k(1-P_{fa})^{K-k}$$

  - There are $\binom{K}{k}$ orderings of $k$ false alarms in $K$ cells



# Synchronization Time (Cont.)

- The probability of the event $(n, j, k)$ is

$$\Pr(n,j,k) = \frac{1}{C} P_d(1-P_d)^j \binom{K}{k} P_{fa}^k (1-P_{fa})^{K-k}$$

- The mean synchronization time is

$$\bar{T}_s = \sum_{n,j,k} T(n,j,k) \Pr(n,j,k)$$

  - The correct cell number $n$ can range over $(1, C)$
  - The number of missed detections $j$ can range from 0 to $\infty$
  - The number of false alarms $k$ can range over $(0, K)$

# Synchronization Time (Cont.)

- The mean synchronization time becomes

$$\overline{T}_s = \frac{1}{C}\sum_{n=1}^{C}\sum_{j=0}^{\infty}\sum_{k=0}^{K}\left[(n+jC)T_i + kT_{fa}\right]\binom{K}{k}P_{fa}^k(1-P_{fa})^{K-k}P_d(1-P_d)^j$$

$$= \frac{1}{C}\sum_{n=1}^{C}\sum_{j=0}^{\infty}(n+jC)T_i\left[\sum_{k=0}^{K}\binom{K}{k}P_{fa}^k(1-P_{fa})^{K-k}\right]P_d(1-P_d)^j$$

$$+\frac{1}{C}\sum_{n=1}^{C}\sum_{j=0}^{\infty}T_{fa}\left[\sum_{k=0}^{K}\binom{K}{k}kP_{fa}^k(1-P_{fa})^{K-k}\right]P_d(1-P_d)^j$$

- The first summation over $k$ equals unity:
  - By the identity $\sum_{k=0}^{K}\binom{K}{k}a^k b^{K-k} = (b+a)^K$

    with $a = P_{fa}$ and $b = 1 - P_{fa}$, $b+a = 1.0$



# Synchronization Time (Cont.)

- The second summation over $k$ equals $KP_{fa}$:
  - The **mean** of a discrete random variable which has a binomial distribution
- The mean synchronization time is simplified to

$$\overline{T}_s = \frac{1}{C}\sum_{n=1}^{C}\sum_{j=0}^{\infty}\left[(n+jC)T_i + KT_{fa}P_{fa}\right]P_d(1-P_d)^j$$

- With $K = n + jC - j - 1$:

$$\overline{T}_s = \frac{1}{C}\sum_{n=1}^{C}\sum_{j=0}^{\infty}\left[(n-1)T_{da} + (j+1)T_i + j(C-1)T_{da}\right]P_d(1-P_d)^j$$

  - where $T_{da} = T_i + T_{fa}P_{fa}$ is the average **dwell time** at a incorrect phase cell

# Synchronization Time (Cont.)

- The average **dwell time** at a incorrect phase cell
  - When no false alarm occurs, it is $T_i$ (the integration time for evaluation of each cell)
  - When a false alarm occurs, it is $T_i + T_{fa}$ (the time required to reject an incorrect cell)

$$T_{da} = (1 - P_{fa})T_i + P_{fa}(T_i + T_{fa}) = T_i + T_{fa}P_{fa}$$

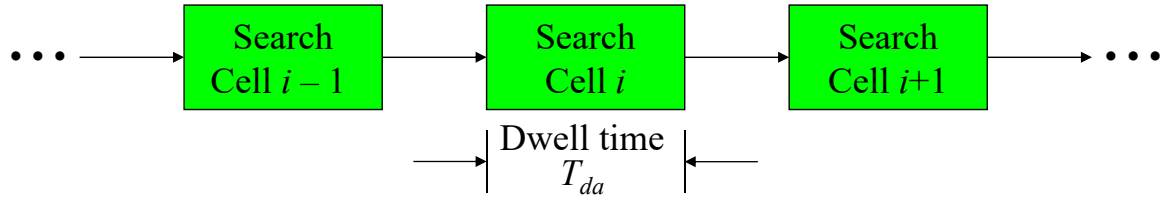




# Synchronization Time (Cont.)

- By using the identities:

$$\sum_{i=1}^{L} i = L\left(\frac{L+1}{2}\right)$$

$$\sum_{i=0}^{\infty} m^i = \left(\frac{1}{1-m}\right)$$

$$\sum_{i=0}^{\infty} i m^i = \frac{m}{(1-m)^2}$$

- The final result of the mean synchronization time is

$$\overline{T}_s = (C-1)T_{da}\left(\frac{2-P_d}{2P_d}\right) + \frac{T_i}{P_d}$$

  - A function of $P_{fa}$ (through the definition of $T_{da}$)

# Synchronization Time (Cont.)

- The mean-square value is

$$\sigma_x^2 = E[(x-\bar{x})^2] = E[x^2] - E^2[x]$$

$$\overline{T_s^2} = \sum_{n,j,k} T^2(n,j,k)\Pr[n,j,k]$$

$$\overline{T_s^2} = \frac{1}{C}\sum_{n=1}^{C}\sum_{j=0}^{\infty}\sum_{k=0}^{K}\left[(n+jC)T_i + kT_{fa}\right]^2 \binom{K}{k} P_{fa}^k (1-P_{fa})^{K-k} P_d (1-P_d)^j$$

- Expanding and grouping like powers of $k$, we have

$$\overline{T_s^2} = \frac{P_d}{C}\sum_{n=1}^{C}\sum_{j=0}^{\infty}\sum_{k=0}^{K}\left(A_2k^2 + A_1k + A_0\right)\binom{K}{k} P_{fa}^k (1-P_{fa})^{K-k} P_d (1-P_d)^j$$

  - where $A_2 = T_{fa}^2;\quad A_1 = 2(n+jC)T_iT_{fa};\quad A_0 = (n+jC)^2T_i^2;$



# Synchronization Time (Cont.)

- The sums over $k$ are the moments of a binomially distributed random variable
  - The first sum is (the second moment):

$$\sum_{k=0}^{K} A_2k^2 \binom{K}{k} P_{fa}^k (1-P_{fa})^{K-k} = A_2\left[K^2P_{fa}^2 + KP_{fa}(1-P_{fa})\right]$$

- The mean-square value is simplified to

$$\overline{T_s^2} = \frac{P_d}{C}\sum_{n=1}^{C}\sum_{j=0}^{\infty}\left\{A_2\left[K^2P_{fa}^2 + KP_{fa}(1-P_{fa})\right] + A_1\left[KP_{fa}\right] + A_0\right\}(1-P_d)^j$$

# Synchronization Time (Cont.)

- With $K = n + jC - j - 1$ and by grouping like power of $j$, we have

$$\overline{T_s^2} = \frac{P_d}{C}\sum_{n=1}^{C}\sum_{j=0}^{\infty}\left(B_2 j^2 + B_1 j + B_0\right)(1-P_d)^j$$

  - where

$$B_2 = C^2T_i^2 + 2C(C-1)T_iT_{fa}P_{fa} + (C-1)^2T_{fa}^2P_{fa}^2$$

$$B_1 = 2nCT_i^2 + 2(2Cn-n-C)T_iT_{fa}P_{fa} + 2(n-1)(C-1)T_{fa}^2P_{fa}^2 + (C-1)T_{fa}^2P_{fa}(1-P_{fa})$$

$$B_0 = n^2T_i^2 + 2n(n-1)T_iT_{fa}P_{fa} + (n-1)^2T_{fa}^2P_{fa}^2 + (n-1)T_{fa}^2P_{fa}(1-P_{fa})$$



# Synchronization Time (Cont.)

- By using the identities:

$$\sum_{i=1}^{L} i = L\left(\frac{L+1}{2}\right)$$

$$\sum_{i=0}^{\infty} m^i = \left(\frac{1}{1-m}\right)$$

$$\sum_{i=0}^{\infty} im^i = \frac{m}{(1-m)^2}$$

$$\sum_{i=0}^{\infty} i^2m^i = \frac{m(1+m)}{(1-m)^3}$$

- The mean mean-square value is simplified to

$$\overline{T_s^2} = \frac{1}{C}\sum_{n=1}^{C}\left[B_2\frac{(1-P_d)(2-P_d)}{P_d^2} + B_1\frac{1-P_d}{P_d} + B_0\right]$$

# Synchronization Time (Cont.)

- By grouping like power of $n$, we have

$$\overline{T_s^2} = \frac{1}{C}\sum_{n=1}^{C}\left(D_2 n^2 + D_1 n + D_0\right)$$

  - where

$$D_2 = \left(T_i + T_{fa}P_{fa}\right)^2$$

$$D_1 = -2T_iT_{fa}P_{fa} - 2T_{fa}^2P_{fa}^2 + T_{fa}^2P_{fa}(1-P_{fa}) + \left[2CT_i^2 + 2(2C-1)T_iT_{fa}P_{fa} + 2(C-1)T_{fa}^2P_{fa}^2\right](1-P_d)/P_d$$

$$D_0 = T_{fa}^2P_{fa}^2 - T_{fa}^2P_{fa}(1-P_{fa}) + \left[-2CT_iT_{fa}P_{fa} - 2(C-1)T_{fa}^2P_{fa}^2 + (C-1)T_{fa}^2P_{fa}^2(1-P_{fa})\right](1-P_d)/P_d + \left[C^2T_i^2 2(2C-1)T_iT_{fa}P_{fa} + (C-1)^2T_{fa}^2P_{fa}^2\right](1-P_d)(2-P_d)/P_d^2$$



# Synchronization Time (Cont.)

- By using the identities:

$$\sum_{n=1}^{C} n = \frac{C(C+1)}{2}$$

$$\sum_{n=1}^{C} n^2 = \frac{C(C+1)(2C+1)}{6}$$

- The final result of the variance is

$$\sigma_{T_s}^2 = \overline{T_s^2} - \left(\overline{T_s}\right)^2 = \left[\frac{C^2-1}{12} - \frac{(C-1)^2}{P_d} + \frac{(C-1)^2}{P_d^2}\right]T_{da}^2 + (2C-1)\frac{1-P_d}{P_d^2}T_i^2 + 2(C-1)\frac{1-P_d}{P_d^2}T_iT_{fa}P_{fa} - (C-1)\frac{2-P_d}{2P_d}T_{fa}^2P_{fa}^2 + (C-1)\frac{2-P_d}{2P_d}T_{fa}^2P_{fa}$$

# Synchronization Time (Cont.)

- For $C >> 1$, $1 - P_d << 1$, and $P_{fa} << 1$, the variance is approximated by

$$\sigma_{T_s}^2 \approx T_{da}^2 C^2 \left( \frac{1}{12} - \frac{1}{P_d} + \frac{1}{P_d^2} \right)$$

- For $C >> 1$, $P_d = 1$, and $P_{fa} = 0$, the variance is

$$\sigma_{T_s}^2 = T_{da}^2 C^2 \left( \frac{1}{12} \right)$$

  - However, if $P_d = 1$, and $P_{fa} = 0$, it implies that $SNR \to \infty$ or $T_i \to \infty$
  - $\Rightarrow \overline{T}_s$ and $\sigma_{T_s}^2 \to \infty$



# Minimizes Mean Synchronization Time

- The mean synchronization time is a function of $P_d$, $P_{fa}$, $T_i$, $T_{fa}$, and $C$
- The phase uncertainty is fixed, but it can be subdivided into **any number** of cells $C$
- The remaining four variables are **not independent** of one another:
  - **High** $P_d$ together with **low** $P_{fa}$ implies large $T_i$

  $\Rightarrow$There will be **an optimum set** of $P_d$, $P_{fa}$, $T_i$, $T_{fa}$ which minimizes mean synchronization time
- It is **not correct** to assume that the minimum average synchronization time will always be achieved with $1 - P_d << 1$
  - A moderate $P_d$ will result in a much lower $T_i$ than a high $P_d$

  $\Rightarrow$Result in reduced average $T_s$

# Modified Sweep Strategies



## Modified Sweep Strategies

- Suppose that the received phase distribution is defined by $p(n)$ within the $n$-th phase cell
  - The sweep strategy should be modified to **search the most likely phase cells first** and then the less likely cells
- If the received phase distribution were **Gaussian**:
  - The discrete probability of the $n$-th phase cell being correct is

$$p(n) = A\exp\left(-\frac{n^2}{2T^2}\right); \quad -\frac{1}{2}C \le n \le +\frac{1}{2}C$$

  - Search the cells within **one standard derivation** ($T$) of the most likely cell first

$$T = (1/6)C$$

$$N_1 = -C/6; \quad N_2 = +C/6; \quad N_3 = -C/3; \quad N_4 = +C/3;$$

# Modified Sweep Strategies (Cont.)

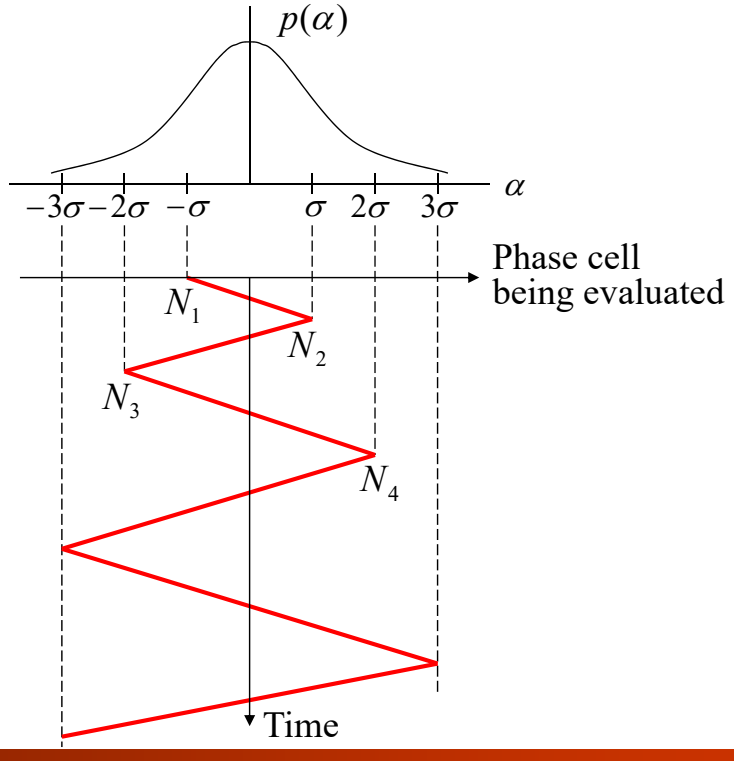




# Modified Sweep Strategies (Cont.)

- The use of modified sweep strategies results in **reduced average synchronization time** when the distribution of the received phase is nonuniform
  - The saving time is a function of the **variance** of the received phase distribution
- Can be applied to Re-synchronization after loss of tracking

# Continuous Linear Sweep



# Continuous Linear Sweep

- Most current SS systems employ a sweep system which moves from one uncertainty cell to the next in **discrete steps**
- Another strategy: **offset the clock frequency** of the reference waveform generator (in the receiver) **slightly**

  $\Rightarrow$The phase of the waveform **slips linearly**

  – The output of the despreading mixer is a **wideband signal** except when the received and reference waveform phases have **slipped sufficiently close** to one another $\Rightarrow$ **Despread**

  – When despreading occurs, the energy can be detected and the sweep terminated

# Continuous Linear Sweep (Cont.)

- The transmitted code sequence is generated with a constant rate
  - The phase of the received code sequence moves forward with a constant rate (i.e., the spreading code rate)
- The local generated code sequence is generated with a rate slightly **larger** (or **smaller**) than the spreading code rate
- Finally, the phase of the local sequence generated will capture the actual code phase

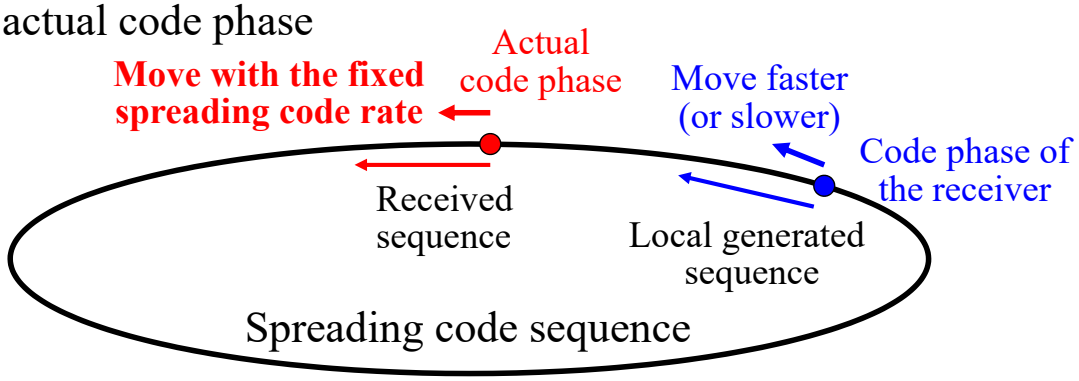




# Continuous Linear Sweep (Cont.)

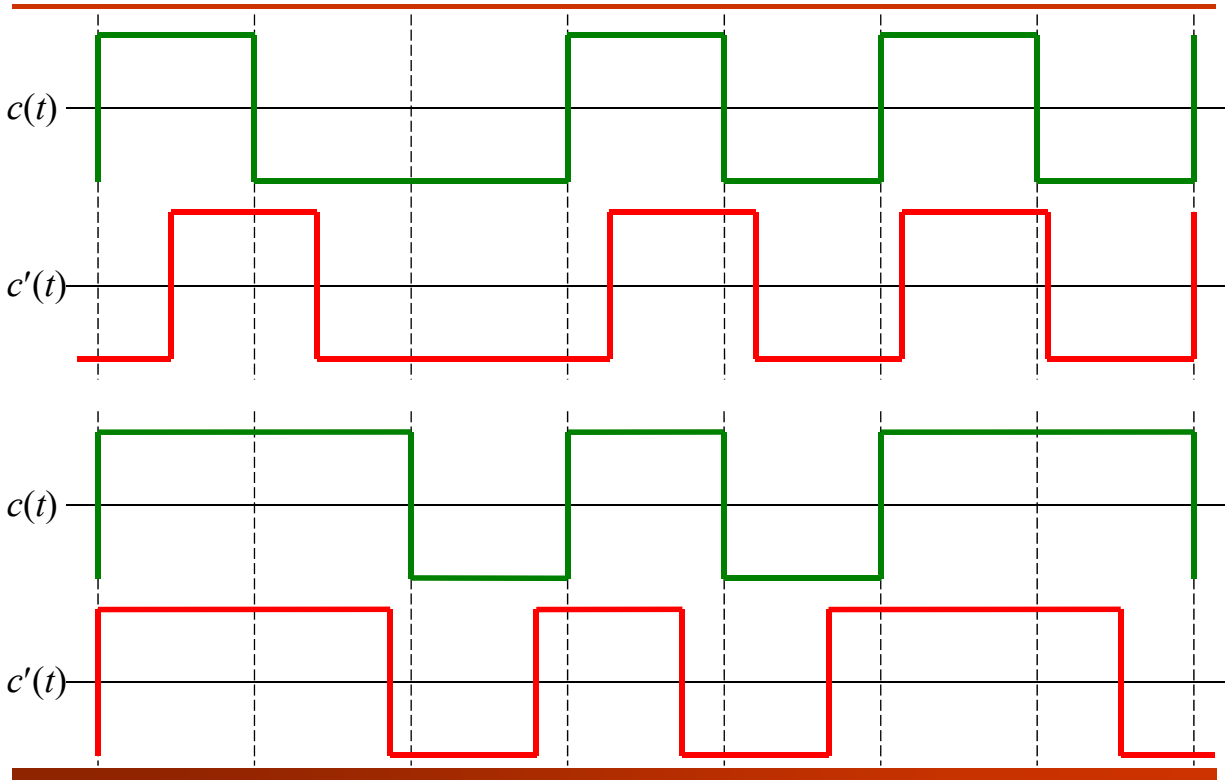

# Continuous Linear Sweep (Cont.)

- Slow sweeping

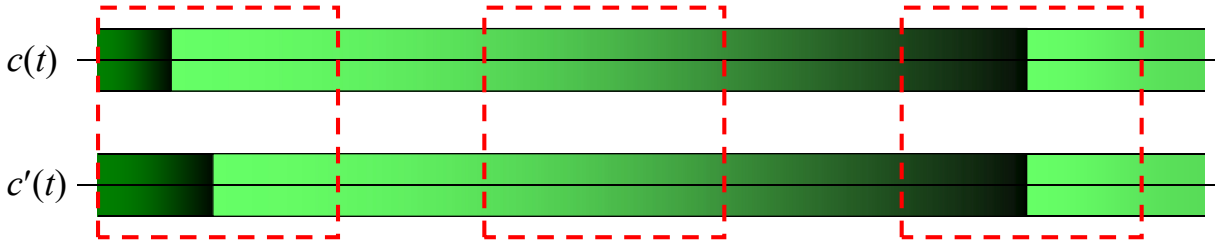


- Fast sweeping

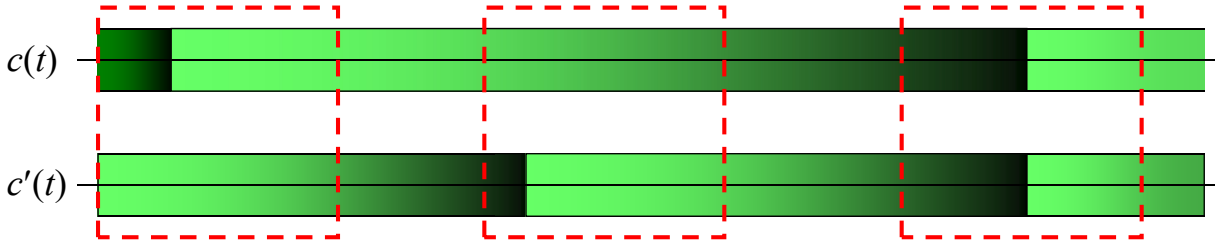




# Continuous Linear Sweep (Cont.)

- The receiver configuration for synchronization is

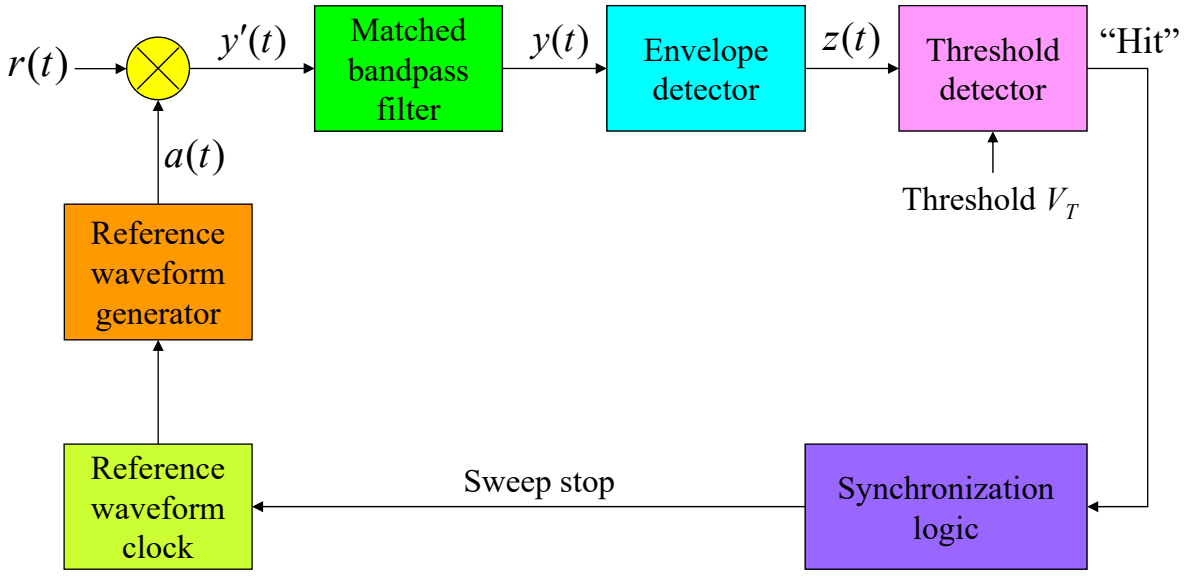

# Continuous Linear Sweep (Cont.)

- Consider BPSK DS modulation, the received waveform is

$$r(t)=\sqrt{2P}c(t-T_d)\cos\omega_0 t+n(t)$$

- The despreading mixer output signal is

$$y'(t)=\sqrt{2P}c(t-T_d)c(t-\hat{T}_d)\cos(\omega_0 t+\theta)+n(t)c(t-\hat{T}_d)$$

  - where $\theta$ is an unknown random phase

- The propagation delay estimate is **varying linearly** with time

$$\hat{T}_d=\hat{T}_d(t)=\hat{T}_{do}+Kt$$

  - where $\hat{T}_{do}$ is an arbitrary fixed initial condition;
  - $K = T_c/T_{SS}$, and $T_{SS}$ is the time required to **search one chip**
  - In general, $T_{SS} >> T_c \Rightarrow K << 1$
  - $K > 0$ ($K < 0$): reference clock frequency is lower (higher)



# Continuous Linear Sweep (Cont.)

- From Eq. (5-31):
  - when $T_d-\hat{T}_d(t)>T_c$ : a wideband signal
  - when $T_d-\hat{T}_d(t)=\tau<T_c$ : the despreading mixer output is a **sinusoidal component** with frequency $\omega_0$ and magnitude $\sqrt{2P}R_c(\tau)$
- The despreading mixer output becomes

$$x'(t)=\sqrt{2P}R_c(T_d-\hat{T}_{do}-Kt)\cos(\omega_0 t+\theta)$$

- The bandpass filter, envelope detector and threshold detector are used to detect the signal approximately when the **peak amplitude** is reached

# Continuous Linear Sweep (Cont.)

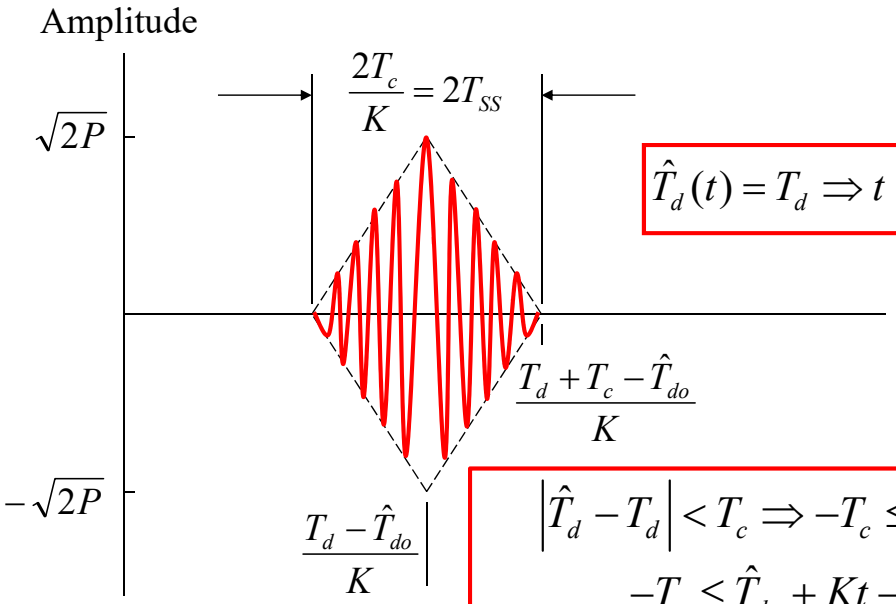


$$\hat{T}_d(t) = T_d \Rightarrow t = \left(T_d - \hat{T}_{do}\right)/K$$

$$\left|\hat{T}_d - T_d\right| < T_c \Rightarrow -T_c \le \hat{T}_d - T_d \le T_c$$

$$-T_c \le \hat{T}_{do} + Kt - T_d \le T_c$$

$$\left(T_d - T_c - \hat{T}_{do}\right)/K \le t \le \left(T_d + T_c - \hat{T}_{do}\right)/K$$



# Continuous Linear Sweep (Cont.)

- The **bandpass filter** is selected to have an impulse response which is **matched to** the signal $x'(t)$:

$$h(t) = bR_c(Kt - T_c)\cos\hat{\omega}_0 t$$

  - The frequency of the received signal is unknown during synchronization $\Rightarrow$ $\hat{\omega}_0$ is used (preset frequency)

- The matched filter output:

$$\cos(\hat{\omega}_0\alpha)\cos[\omega_0(t-\alpha)]$$
$$\cos(x)\cos(y) = \cos(x+y)/2 + \cos(x-y)/2$$

$$x(t) = \int_{-\infty}^{\infty} h(\alpha)x'(t-\alpha)\,d\alpha$$

$$= \sqrt{\frac{P}{2}}b\int_{-\infty}^{\infty} R_c\left(K\alpha - T_c\right)R_c\left(T_d - \hat{T}_{do} - Kt + K\alpha\right)\cos\left(\Delta\omega_0\alpha + \omega_0 t + \theta\right)d\alpha$$

$$+\sqrt{\frac{P}{2}}b\int_{-\infty}^{\infty} R_c\left(K\alpha - T_c\right)R_c\left(T_d - \hat{T}_{do} - Kt + K\alpha\right)\cos\left[(\omega_0 + \hat{\omega}_0)\alpha - \omega_0 t - \theta\right]d\alpha$$

  - where $\Delta\omega_0 = \hat{\omega}_0 - \omega_0$

# Continuous Linear Sweep (Cont.)

- Assume that the carrier frequency is **large** relative to the maximum rate of change of the autocorrelation product

  $\Rightarrow$ The second integral may be ignored

- Hence,

$$x(t) \cong \sqrt{\frac{P}{2}} b \int_{-\infty}^{\infty} R_c\left(K\alpha - T_c\right) R_c\left(T_d - \hat{T}_{do} - Kt + K\alpha\right) \cos\left(\Delta\omega_0 \alpha + \omega_0 t + \theta\right) d\alpha$$

$$= \sqrt{\frac{P}{2}} b \cos(\omega_0 t + \theta) \int_{-\infty}^{\infty} R_c(K\alpha - T_c) R_c(T_d - \hat{T}_{do} - Kt + K\alpha) \times \cos(\Delta\omega_0 \alpha)\, d\alpha$$

$$- \sqrt{\frac{P}{2}} b \sin(\omega_0 t + \theta) \int_{-\infty}^{\infty} R_c(K\alpha - T_c) R_c(T_d - \hat{T}_{do} - Kt + K\alpha) \times \sin(\Delta\omega_0 \alpha)\, d\alpha$$



# Continuous Linear Sweep (Cont.)

- Assume that the frequency error $\Delta f_0 = \Delta\omega_0 / 2\pi$ is **small enough** $\left(\Delta\omega_0 = \hat{\omega}_0 - \omega_0\right)$

  $\Rightarrow$ The sine and cosine within integrals are approximately **constant** over the range of nonzero values of the autocorrelation products $\cos(\Delta\omega_0\alpha); \sin(\Delta\omega_0\alpha)$

- $h(\alpha)$ takes values only for $0 \le \alpha \le 2T_c / K \Rightarrow$ set $\alpha = T_c / K$
- Set the arguments of the sine and cosine be $\Delta\omega_0\alpha = \Delta\omega_0 T_c / K$

$$x(t) \cong \sqrt{\frac{P}{2}} b \cos\left(\omega_0 t + \theta + \Delta\omega_0 \frac{T_c}{K}\right) \times \int_{-\infty}^{\infty} R_c\left(K\alpha - T_c\right) R_c\left(T_d - \hat{T}_{do} - Kt + K\alpha\right) d\alpha$$

$$\cos(\Delta\omega_0\alpha) \cong \cos(\Delta\omega_0 T_c / K)$$
$$\sin(\Delta\omega_0\alpha) \cong \sin(\Delta\omega_0 T_c / K)$$

- The maximum occurs at the **end** of the triangular pulse: (Fig. 5-5) $t = \left(T_d + T_c - \hat{T}_{do}\right) / K$

# Continuous Linear Sweep (Cont.)

- The maximum filter output is

$$\int_{-\infty}^{\infty} R_c^2(K\alpha - T_c)\, d\alpha = 2T_{ss}/3$$

$$x_{\max}(t) = \sqrt{\frac{P}{2}} b \cos\left(\omega_0 t + \theta + \Delta\omega_0 \frac{T_c}{K}\right) \int_{-\infty}^{\infty} R_c^2(K\alpha - T_c)\, d\alpha$$

$$= \frac{\sqrt{2P}}{3} b T_{ss} \cos\left(\omega_0 t + \theta + \Delta\omega_0 T_{ss}\right) \qquad (5.37)$$

- The noise power is calculated using the **baseband equivalent** filter transfer function:

$$h(t) = 2\,\mathrm{Re}\left[\tilde{h}(t) e^{j\hat{\omega}_0 t}\right]$$

$$\tilde{h}(t) = \frac{b}{2} R_c(Kt - T_c)$$



# Continuous Linear Sweep (Cont.)

- The Fourier transform of $\tilde{h}(t)$ is

$$\tilde{H}(f) = \frac{b}{2} T_{ss} \,\mathrm{sinc}^2(fT_{ss})$$

- The equivalent baseband noise PSD is

$$S_{\tilde{n}}(f) \cong 2S_{n_I}(f) = \begin{cases} N_0 & |f| < B \\ 0 & \text{elsewhere} \end{cases}$$

- The noise power at the filter output is

$$N = \int_{-\infty}^{\infty} \left|\tilde{H}(f)\right|^2 S_{\tilde{n}}(f) df$$

$$= \frac{1}{4} b^2 T_{SS}^2 N_0 \int_{-B}^{B} \mathrm{sinc}^4(fT_s) df \cong \frac{b^2}{6} T_{SS} N_0$$

# Continuous Linear Sweep (Cont.)

- The maximum signal-to-noise power ratio at the matched filter output is

$$SNR_{\max} = \frac{E\left[x_{\max}^2(t)\right]}{N} = \frac{\left[(\sqrt{2P}/3)bT_{ss}\right]^2/2}{b^2T_{ss}N_0/6} = \frac{2}{3}\left(\frac{PT_{ss}}{N_0}\right)$$

  - The SNR increases with **increasing $T_{ss}$** or, equivalently, with **decreasing sweep rate**
- The function of the envelope detector and threshold comparator is used to
  - Detect the **presence** of the sinusoid (Eq. (5-37))



# Continuous Linear Sweep (Cont.)

- The density function of the envelope detector output is **Ricean** pdf.
- Denote the envelope detector output by $z(t)$:

$$p_z(\alpha) = \begin{cases} \frac{\alpha}{N}\exp\left(-\frac{\alpha^2+A^2}{2N}\right)I_0\left(\frac{\alpha A}{N}\right), & \text{for } \alpha \geq 0 \\ 0, & \text{elsewhere} \end{cases}$$

  - where $N$: the noise power, $A$: the amplitude of the sinusoid, and $I_0(\cdot)$: the zeroth-order modified Bessel function

# Continuous Linear Sweep (Cont.)

- For the probability of **detection**:
  - $A \neq 0$, signal and noise present $\Rightarrow$ **Ricean** pdf
  - Integration from $V_T$ to infinity of the Ricean pdf evaluated at the **maximum signal-to-noise ratio**
- For the probability of **false alarm**:
  - $A = 0$, noise only $\Rightarrow$ **Rayleigh** pdf
  - Integration from $V_T$ to infinity of the Rayleigh pdf evaluated at the **minimum signal-to-noise ratio** (for $A = 0$, noise only)
- Both $P_d$ and $P_{fa}$ are functions of SNR and $V_T$, and **cannot be independently selected**
  - For a specific SNR, the selection of $P_{fa}$ implies a particular threshold $V_T$, which then sets $P_d$



# Continuous Linear Sweep (Cont.)

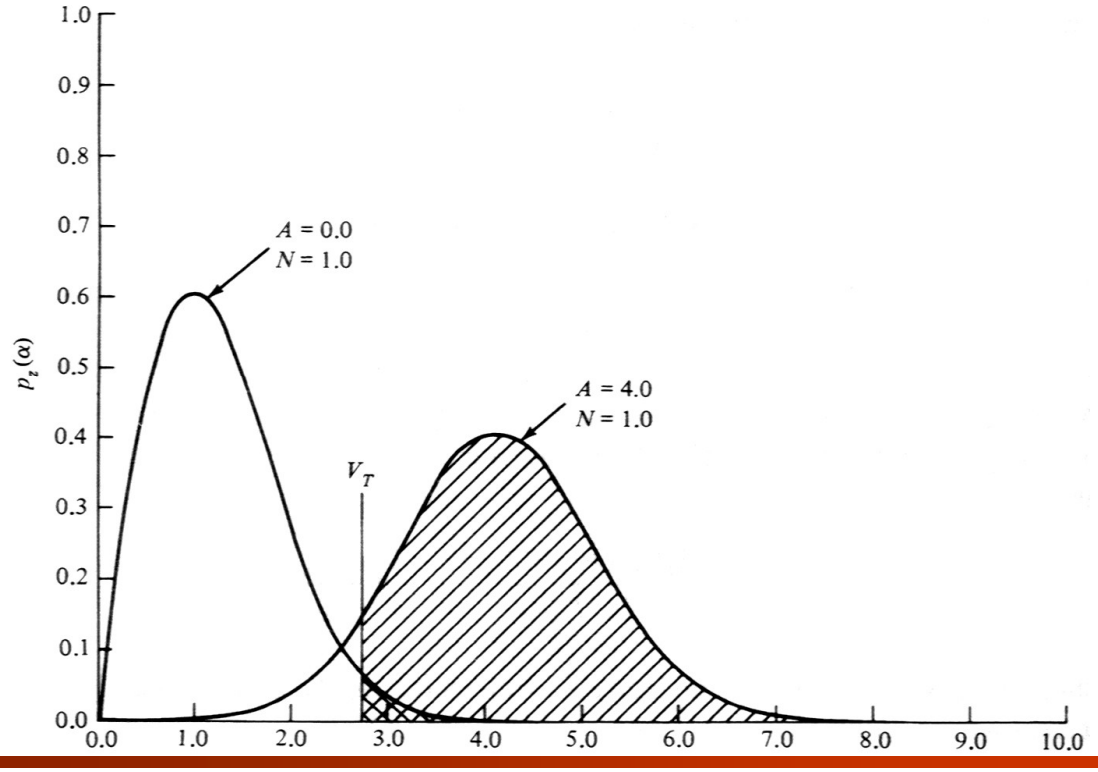

# Continuous Linear Sweep (Cont.)

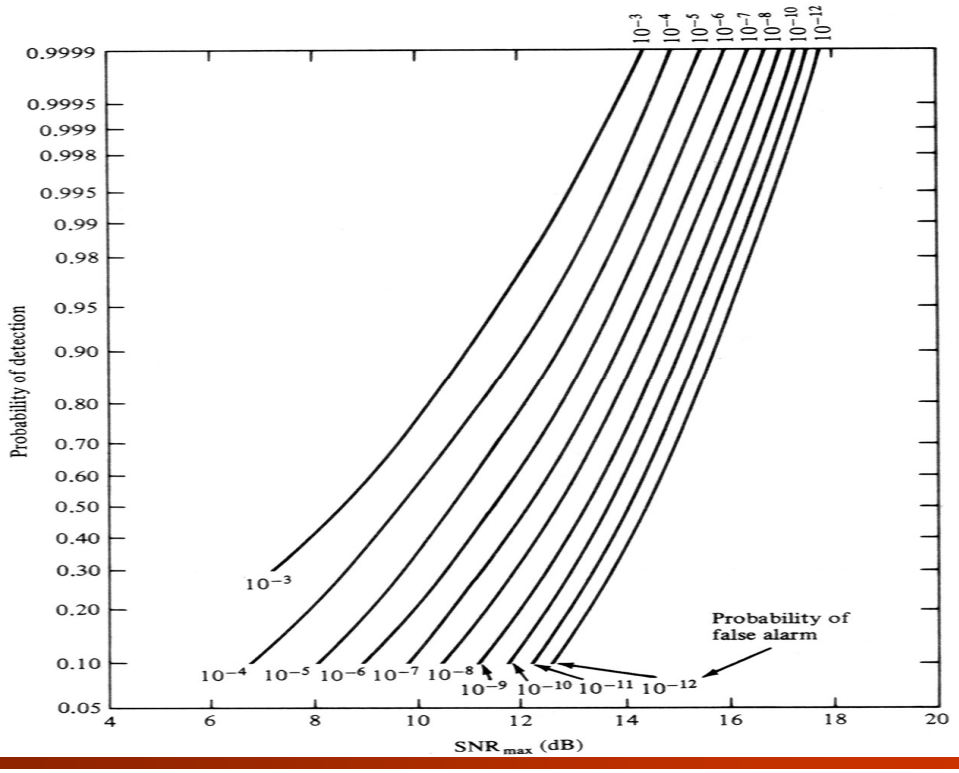




# Continuous Linear Sweep (Cont.)

- The calculation of points on the curves of Fig. 5-7:
  - A preset $P_{fa}$ implies a particular threshold $V_T$
  - Integrate the Ricean density function over the limits of $V_T$ to infinity using the desired SNR $\Rightarrow P_d$
  - Marcum Q-function:

$$Q(a,b) \triangleq \int_b^\infty \alpha \exp\left[-\frac{1}{2}\left(\alpha^2 + a^2\right)\right] I_0(a\alpha)\, d\alpha$$

    - SNR $\rightarrow a$
    - Threshold $V_T \rightarrow b$

# Example

- The spreading code clock frequency is $f_c$ = 3 MHz
- The received carrier power-to-noise power spectral density ratio is 46.25 dB-Hz = 10 log($P/N_0$)
- The propagation delay uncertainty is ±1.2 ms
- If ($P_d$, $P_{fa}$) pairs are (0.9, $10^{-6}$), (0.8, $10^{-6}$), (0.9, $10^{-3}$), (0.8, $10^{-3}$)
- From Fig. 5-7, the required signal-to-noise ratios for these four ($P_d$, $P_{fa}$) pairs are 13.4, 12.8, 11.0, and 10.3 dB

$$10\log(SNR_{\max}) = 10\log\left(\frac{2}{3}\right) + 10\log\left(\frac{P}{N_0}\right) + 10\log(T_{ss})$$

$$13.4 = -1.761 + 46.25 + 10\log(T_{ss})$$

$$10\log(T_{ss}) = -31.09$$

$$T_{ss} = 778\ \mu s$$



# Example (Cont.)

- Solving for $T_{ss}$:

$$T_{ss} = \begin{cases} 778\ \mu s & \text{for } (0.9, 10^{-6}) \\ 678\ \mu s & \text{for } (0.8, 10^{-6}) \\ 448\ \mu s & \text{for } (0.9, 10^{-3}) \\ 381\ \mu s & \text{for } (0.8, 10^{-3}) \end{cases}$$

- If the false-alarm penalty is 100 $T_i$:

$$T_i = T_{ss}$$

$$T_{da} = T_{ss} + P_{fa}(100T_{ss}) = T_{ss}(1 + 100P_{fa})$$

$$C = 2 \times (1.2\text{ms}) \times (3 \times 10^6 \text{ chips/s}) = 7.2 \times 10^3$$

$$\overline{T}_s = (C-1)T_{da}\left(\frac{2-P_d}{2P_d}\right) + \frac{T_i}{P_d} = 7199T_{ss}\left(1 + 100P_{fa}\right)\left(\frac{2-P_d}{2P_d}\right) + \frac{T_{ss}}{P_d}$$

# Example (Cont.)

- Solving for $\overline{T}_s$:

$$\overline{T}_s = \begin{cases} 3.42\,s & \text{for } (0.9, 10^{-6}) \\ 3.66\,s & \text{for } (0.8, 10^{-6}) \\ 2.17\,s & \text{for } (0.9, 10^{-3}) \\ 2.26\,s & \text{for } (0.8, 10^{-3}) \end{cases}$$

- Permitting $P_{fa}$ to increase by three orders of magnitude can decrease synchronization time significantly



# Detection of A Signal in AWGN

# Detection of A Signal in AWGN

- All synchronization systems that employ a **discrete step serial search** evaluate a particular phase/frequency cell by estimating the presence of signal energy
- The mean and variance of the synchronization time, $P_d$ and $P_{fa}$ are a function of evaluation time $T_i$ and the received SNR
- Three different methods of detecting signal energy are
  - **Fixed integration time detection**
  - **Multiple-dwell detection**
  - **Sequential detection**
- Each method results in a different relationship between $P_d$, $P_{fa}$, $T_i$, and SNR



# Fixed Integration Time Detection

# Fixed Integration Time Detection

- The **simplest method** of detecting the presence of signal energy at the output of a narrowband filter
- At the bandpass filter output:
  - $s(t)$ appears when the reference waveform **phase is correct**
  - $n(t)$ is the AWGN process that will be **always present**

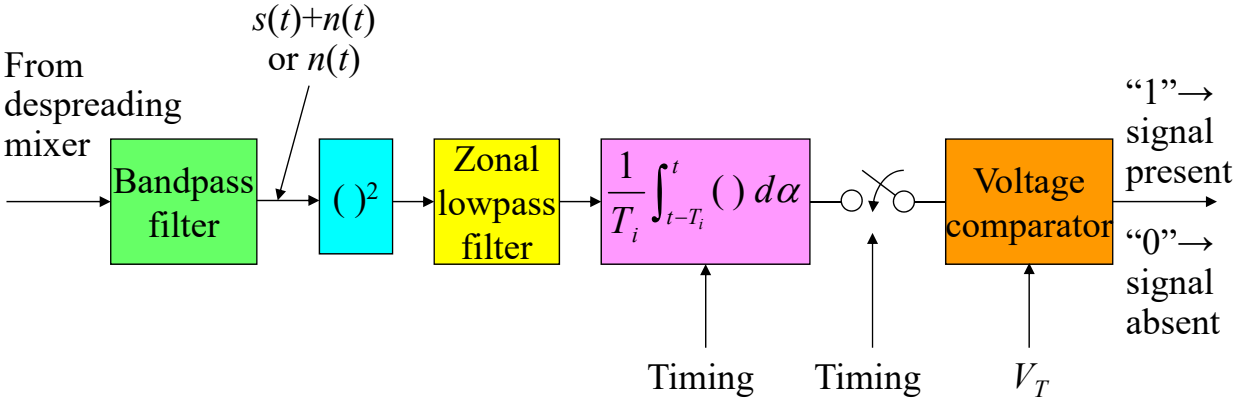




# Fixed Integration Time Detection (Cont.)

- The filter output is squared and then lowpass filtered (Zonal lowpass filter) to eliminate the **double-frequency terms** (which result from the squaring operation)
- The lowpass squared output is integrated for $T_i$ seconds
  - From $t - T_i$ to $t$ (present time)
- The output is compared to a fixed threshold $V_T$:
  - Above the threshold: the signal is declared **present**
  - Otherwise: the signal is declared **absent**

# Multiple-Dwell Detection



# Multiple-Dwell Detection

- Fixed integration time detection is limited in that only two parameters, $T_i$ and $V_T$, can be varied to reduce the synchronization time
- Note that there is **only one** correct cell within the uncertainty region
  - Other cells evaluated by the energy detector are **noise alone**

  $\Rightarrow$ An energy detection scheme that is capable of rejecting incorrect phase cells **rapidly** while not letting $P_{fa}$ become so large is highly desirable

# Multiple-Dwell Detection (Cont.)

- The multiple-dwell detection scheme uses **multiple evaluations** for each phase cell
  - The **first evaluation** is **very short** (short integration time)
    - Results in immediate rejection of many incorrect cells
    - Results in a high false-alarm probability
  - When a false alarm occurs on the first evaluation, a **second evaluation** (**longer** integration time) of the same cell begins
    - Reduces the false-alarm probability
  - The second evaluation may be followed by a third, fourth, or as many as desired to achieve a particular performance



# Multiple-Dwell Detection – Block Diagram

- Fig. 5-13 is a simplified conceptual block diagram:
  - Selects integration times $T_j$ and thresholds $V_j$ for each integration

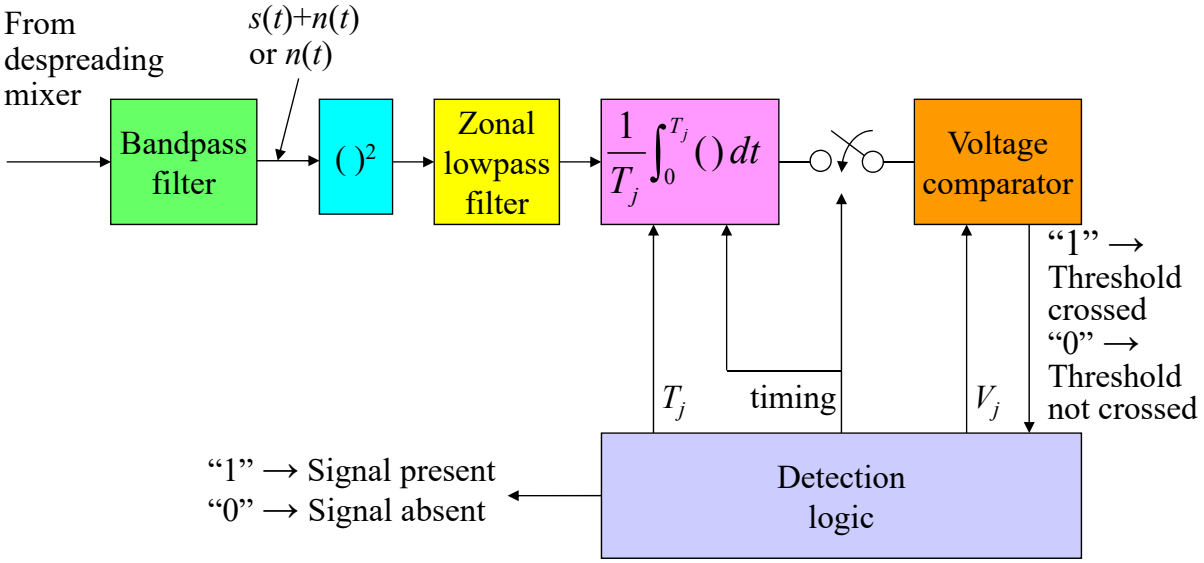

# Multiple-Dwell Detection – Flow Diagram

- Fig. 5-14 is a flow diagram
- Integration 1: integrates for $T_1$ seconds, and the integrator output $V$ is compared with a threshold $V_1$
  - If $V < V_1$, a "miss" (**incorrect** phase) is declared
  - If $V > V_1$, a "hit" (**potential correct** phase) is declared
- Integration $k$: integrates for $T_k$ seconds, and the integrator output $V$ is compared with a threshold $V_k$
- The "hit" output from **integration 3** generates the "**signal present**" output
- The "**signal absent**" output is generated when a "miss" occurs on any of the **first three integrations**



# Multiple-Dwell Detection–Flow Diagram (Cont.)

- Integration 4 and integration 5 provide a means for detecting when the **code tracking loop** has lost lock
  - These two integration times may be quite large
  - Because an incorrect dismissal of the **correct code phase** is very serious
    - The correct code phase will appear after $N$ cells
  - When a false alarm occurs, **Integrations 4 and 5** must be performed before the code phase can be rejected
- During **normal code tracking**, the logic continues to cycle around the loop connecting **Integrations 4 and itself**
  - Code tracking and demodulation
- Therefore, $\boldsymbol{T_1 < T_2 < T_3 < T_4 < T_5}$

# Multiple-Dwell Detection–Flow Diagram (Cont.)

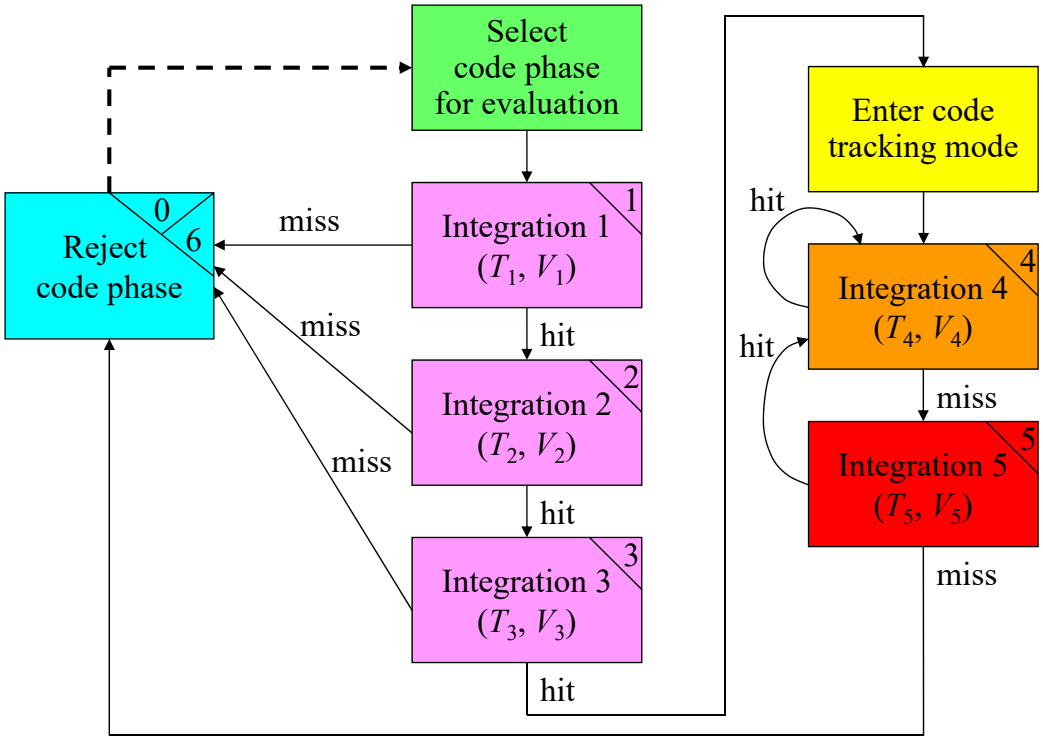




# Multiple-Dwell Detection – State Transition

- Fig. 5-14 can be represented by a state transition diagram as Fig. 5-15
  - The 0/6 state has been split into two states
  - $T_{da}$: the average time required for the system to progress from state 1 to state 0/6
  - Each transition of the diagram is labeled with
    - $P_{jk}$: **transition probability** from state $j$ to state $k$ (calculated from the integration time $T_j$, the threshold $V_j$, and the SNR)
    - $z$: raised to a power equal to the **integration time** associated with the "from" state

# MD Detection–State Transition (Cont.)

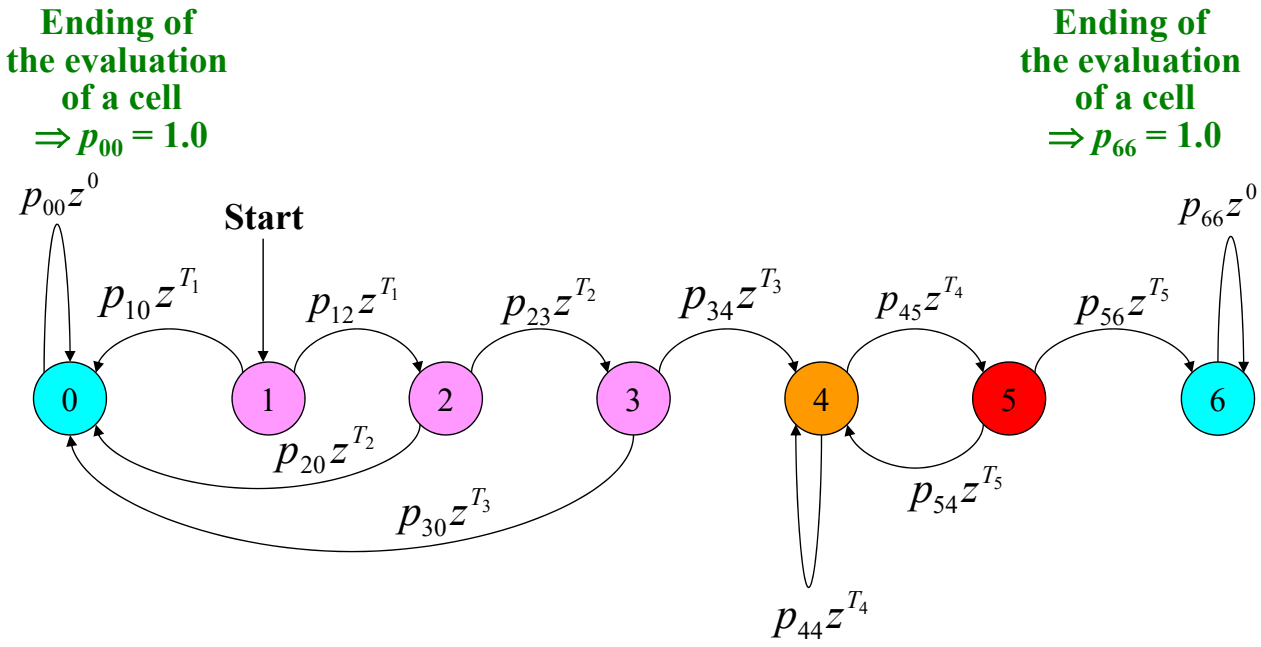




# MD Detection – Synchronization Time

- The mean time required to reject an incorrect phase is

$$T_{da} = \sum_{l \in L} \Pr(l) T_l$$

  - $L$: the set of all paths beginning at state 1 and ending at either state 0 or 6
  - $l$: a particular path in $L$
  - $\Pr(l)$: the probability of following path $l$
  - $T_l$: the time required to traverse path $l$

# MD Detection – Synchronization Time (Cont.)

- For a specific path $l_0$ through the state diagram:
  - Path 1-2-3-0
  - The probability of this path is

$$\Pr(l_0) = p_{12}p_{23}p_{30}$$

  - The time required to traverse this path is

$$T_{l_0} = T_1 + T_2 + T_3$$

$$\Pr(l_0)T_{l_0} = p_{12}p_{23}p_{30}(T_1 + T_2 + T_3)$$

  - Let $B(l,z)$ denote the product of the path labels

$$B(l_0,z) = p_{12}z^{T_1}p_{23}z^{T_2}p_{30}z^{T_3}$$
$$= p_{12}p_{23}p_{30}z^{T_1+T_2+T_3}$$



# MD Detection – Synchronization Time (Cont.)

$$\frac{d}{dz}B(l_0,z) = p_{12}p_{23}p_{30}(T_1 + T_2 + T_3)z^{T_1+T_2+T_3-1}$$

  - Equals to Eq. (5-93) if $z = 1.0$:

$$\Pr(l_0)T_{l_0} = \left[\frac{d}{dz}B(l_0,z)\right]_{z=1}$$

- The mean time required to reject an incorrect phase is

$$T_{da} = \sum_{l\in L}\Pr(l)T_l = \sum_{l\in L}\left[\frac{d}{dz}B(l,z)\right]_{z=1}$$

# MD Detection – Synchronization Time (Cont.)

- The state-transition diagram can also be described by a **transition matrix**:
  - Rows: starting states
  - Columns: ending states
  - Elements: path labels

$$\mathbf{Q}' = \begin{array}{c} \\ 0 \\ 6 \\ 1 \\ 2 \\ 3 \\ 4 \\ 5 \end{array} \begin{array}{c} \begin{array}{ccccccc} 0 & 6 & 1 & 2 & 3 & 4 & 5 \end{array} \leftarrow \text{“to” state} \\ \left[\begin{array}{ccc:cccc} p_{00}z^{0} & 0 & 0 & 0 & 0 & 0 & 0 \\ 0 & p_{66}z^{0} & 0 & 0 & 0 & 0 & 0 \\ \hdashline p_{10}z^{T_1} & 0 & 0 & p_{12}z^{T_1} & 0 & 0 & 0 \\ p_{20}z^{T_2} & 0 & 0 & 0 & p_{23}z^{T_2} & 0 & 0 \\ p_{30}z^{T_3} & 0 & 0 & 0 & 0 & p_{34}z^{T_3} & 0 \\ 0 & 0 & 0 & 0 & 0 & p_{44}z^{T_4} & p_{45}z^{T_4} \\ 0 & p_{56}z^{T_5} & 0 & 0 & 0 & p_{54}z^{T_5} & 0 \end{array}\right] \end{array}$$

“from” state →



# MD Detection – Synchronization Time (Cont.)

- The matrix **Q′** is partitioned into **submatrices**: **U**, **R**, **Q**, and **0**
  - **Q** contains information about all the system **internal states**

$$\mathbf{Q}' \triangleq \left[\begin{array}{c:c} \mathbf{U} & \mathbf{0} \\ \hdashline \mathbf{R} & \mathbf{Q} \end{array}\right]$$

**0: No outer states to inner states is allowed**

  - **U**: Outer states to outer states
  - **R**: Inner states to outer states
  - **Q**: Inner states to inner states
- Define a new matrix $\mathbf{X} = \mathbf{Q}^n\mathbf{R}$:

**Inner → Inner → … → Inner → Outer**

  - Rows: inner states (starting states)
  - Columns: end states (ending states)
  - Element ($x_{jk}$): the sum of the product of path labels on the associated path of length $n + 1$ from state $j$ to state $k$
  - A nonzero element implies that the transition path is **feasible**.

# Example

- Consider the state transition diagram:

$$\mathbf{Q}' = \begin{array}{c} \\ 0 \\ 4 \\ 1 \\ 2 \\ 3 \end{array} \begin{array}{c} \begin{array}{ccccc} 0 & 4 & 1 & 2 & 3 \end{array} \\ \left[\begin{array}{ccc|cc} 1 & 0 & 0 & 0 & 0 \\ 0 & 1 & 0 & 0 & 0 \\ \hline p_{10}z^{T_1} & 0 & 0 & p_{12}z^{T_1} & 0 \\ 0 & 0 & p_{21}z^{T_2} & 0 & p_{23}z^{T_2} \\ 0 & p_{34}z^{T_3} & 0 & 0 & p_{33}z^{T_3} \end{array}\right] \end{array}$$

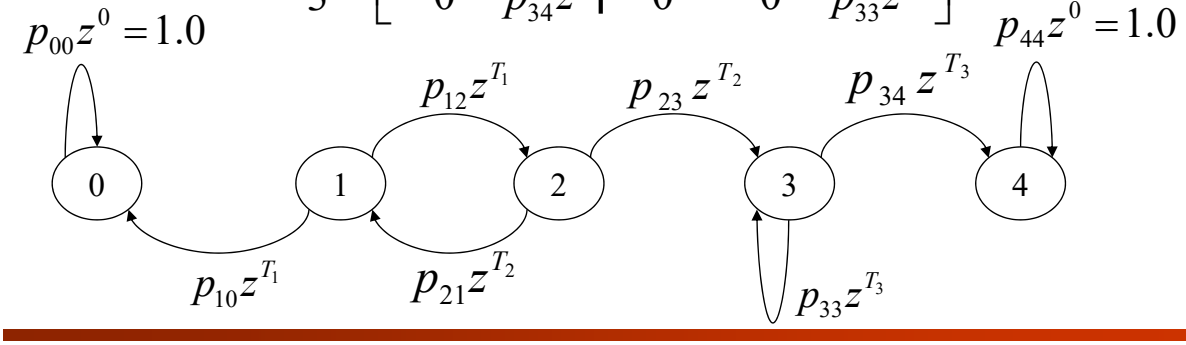




# Example (Cont.)

$$\mathbf{R} = \begin{bmatrix} p_{10}z^{T_1} & 0 \\ 0 & 0 \\ 0 & p_{34}z^{T_3} \end{bmatrix}$$

$$\mathbf{Q} = \begin{bmatrix} 0 & p_{12}z^{T_1} & 0 \\ p_{21}z^{T_2} & 0 & p_{23}z^{T_2} \\ 0 & 0 & p_{33}z^{T_3} \end{bmatrix}$$

$$\mathbf{X} = \mathbf{Q}^3\mathbf{R} = \begin{array}{c} \\ 1 \\ 2 \\ 3 \end{array} \begin{array}{c} \begin{array}{cc} 0 & 4 \end{array} \\ \begin{bmatrix} 0 & p_{12}p_{23}p_{33}p_{34}z^{T_1+T_2+2T_3} \\ p_{12}p_{21}^2p_{10}z^{2T_1+2T_2} & p_{21}p_{12}p_{23}p_{34}z^{T_1+2T_2+T_3} + p_{23}p_{33}^2p_{34}z^{T_2+3T_3} \\ 0 & p_{33}^3p_{34}z^{4T_3} \end{bmatrix} \end{array}$$

# Example (Cont.)

**State 2 → State 0**

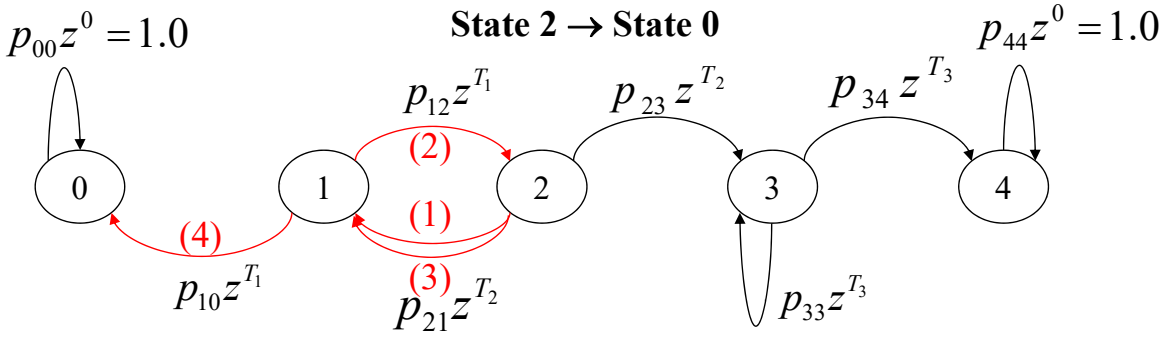


**State 1 → State 4**

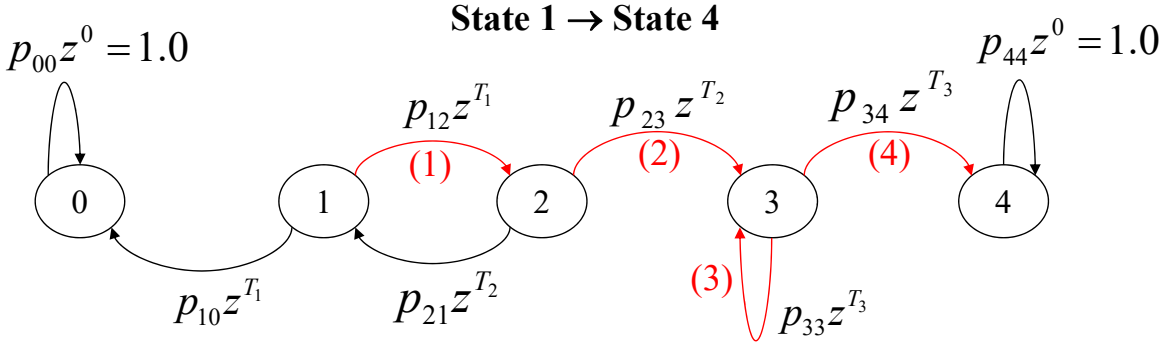




# Example (Cont.)

**State 2 → State 4**

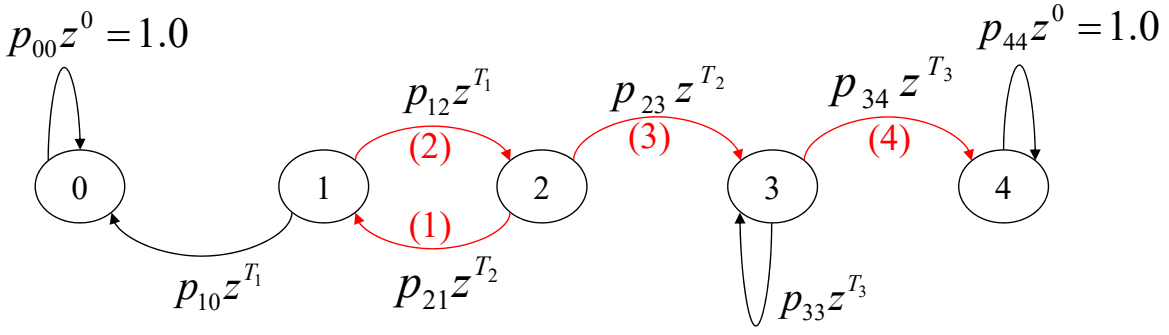


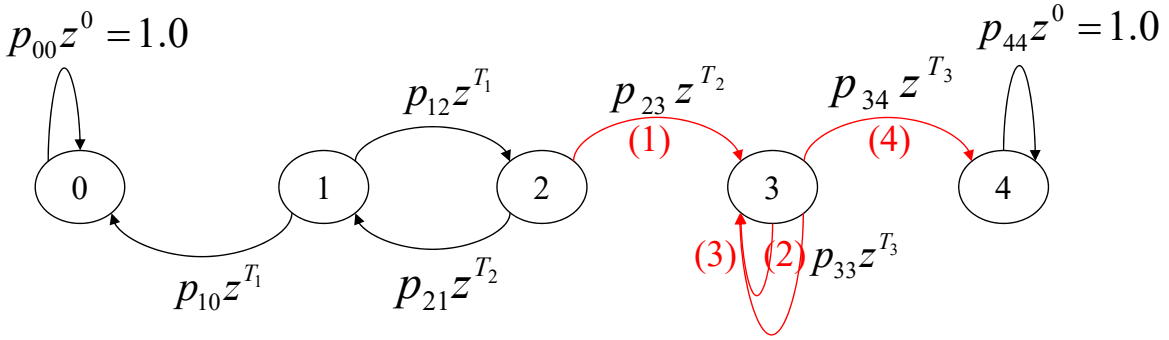

# Example (Cont.)

**State 3 → State 4**

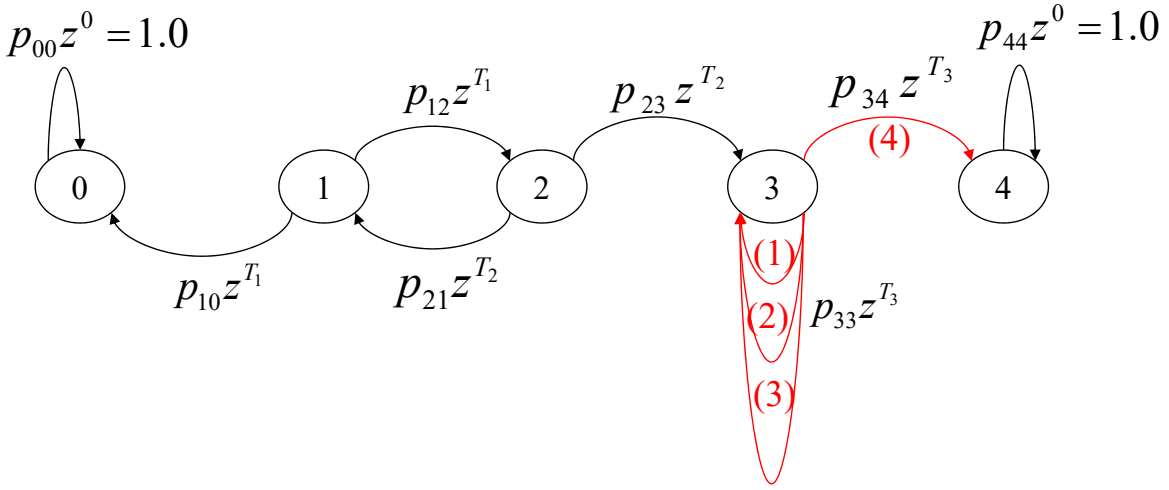




# MD Detection – Synchronization Time (Cont.)

- The infinite matrix sum **Y** enumerates **all paths of all lengths** between inner states and end states **1 trans. + 2 trans. + …**

$$\mathbf{Y} = \mathbf{R} + \mathbf{QR} + \mathbf{Q}^2\mathbf{R} + \mathbf{Q}^3\mathbf{R} + \cdots$$

$$y_{jk} = \sum_{l \in L(j,k)} B(l,z)$$

  - where $L(j,k)$ is the set of all paths beginning at state $j$ and ending at state $k$
- For the average time to reject an incorrect cell
  - $L$ denotes all paths between state 1 and state 0 or 6

$$T_{da} = \sum_{l \in L} \Pr(l) T_l = \sum_{l \in L} \left[ \frac{d}{dz} B(l,z) \right]_{z=1}$$

$$L = L(1,0) + L(1,6)$$

# MD Detection – Synchronization Time (Cont.)

- The average time to reject an incorrect cell is:

**No false alarm** **False alarm occurs**

$$T_{da} = \sum_{l \in L(1,0)} \left[ \frac{d}{dz} B(l,z) \right]_{z=1} + \sum_{l \in L(1,6)} \left[ \frac{d}{dz} B(l,z) \right]_{z=1}$$

$$= \left\{ \frac{d}{dz} \left[ \sum_{l \in L(1,0)} B(l,z) \right] + \frac{d}{dz} \left[ \sum_{l \in L(1,6)} B(l,z) \right] \right\}_{z=1}$$

$$= \left[ \frac{d}{dz}(y_{10}) + \frac{d}{dz}(y_{16}) \right]_{z=1}$$

- The matrix **Y** can be rewritten as

$$\mathbf{Y} = (\mathbf{I} + \mathbf{Q} + \mathbf{Q}^2 + \cdots)\mathbf{R}$$

$$= (\mathbf{I} - \mathbf{Q})^{-1}\mathbf{R}$$



# MD Detection – Synchronization Time (Cont.)

- The derivative with respect to $z$ is

$$\frac{d}{dz}(\mathbf{Y}) = (\mathbf{I} - \mathbf{Q})^{-1} \left( \frac{d}{dz}\mathbf{R} \right) + \left[ \frac{d}{dz}(\mathbf{I} - \mathbf{Q})^{-1} \right] \mathbf{R}$$

$$= (\mathbf{I} - \mathbf{Q})^{-1} \left( \frac{d}{dz}\mathbf{R} \right) - (\mathbf{I} - \mathbf{Q})^{-1} \left[ \frac{d}{dz}(\mathbf{I} - \mathbf{Q}) \right] (\mathbf{I} - \mathbf{Q})^{-1}\mathbf{R}$$

$$\because \frac{d}{dz}\mathbf{A}^{-1} = -\mathbf{A}^{-1} \left( \frac{d}{dz}\mathbf{A} \right) \mathbf{A}^{-1}$$

- Define a diagonal $n \times n$ matrix **T** of **integration times**

$$\mathbf{T} = \begin{bmatrix} T_1 & & \mathbf{0} \\ & T_2 & \\ & & \ddots \\ \mathbf{0} & & T_n \end{bmatrix}$$

# MD Detection – Synchronization Time (Cont.)

$$\left(\frac{d}{dz}\mathbf{R}\right)_{z=1} = (\mathbf{TR})_{z=1}$$

**From state *i* to outer states ⇒ Time interval $T_i$**

$$\left[\frac{d}{dz}(\mathbf{I}-\mathbf{Q})\right]_{z=1} = (-\mathbf{TQ})_{z=1}$$

**From state *i* to inner states ⇒ Time interval $T_i$**

- With $z = 1.0$:

$$\begin{aligned}\left(\frac{d}{dz}\mathbf{Y}\right)_{z=1} &= \left\{(\mathbf{I}-\mathbf{Q})^{-1}\mathbf{TR} + (\mathbf{I}-\mathbf{Q})^{-1}\mathbf{TQ}(\mathbf{I}-\mathbf{Q})^{-1}\mathbf{R}\right\}_{z=1} \\ &= \left\{(\mathbf{I}-\mathbf{Q})^{-1}\mathbf{T}\left[\mathbf{I}+\mathbf{Q}(\mathbf{I}-\mathbf{Q})^{-1}\right]\mathbf{R}\right\}_{z=1} \\ &= \left\{(\mathbf{I}-\mathbf{Q})^{-1}\mathbf{T}\left[\mathbf{I}+\mathbf{Q}(\mathbf{I}+\mathbf{Q}+\mathbf{Q}^2+\cdots)\right]\mathbf{R}\right\}_{z=1} \\ &= \left[(\mathbf{I}-\mathbf{Q})^{-1}\mathbf{T}(\mathbf{I}-\mathbf{Q})^{-1}\mathbf{R}\right]_{z=1}\end{aligned}$$



# MD Detection – Synchronization Time (Cont.)

- The average time required to reject an **incorrect phase cell** is the sum of the elements on the **first row** of Eq. (5-113)
  - From state 1 to state 0 + From state 1 to state 6

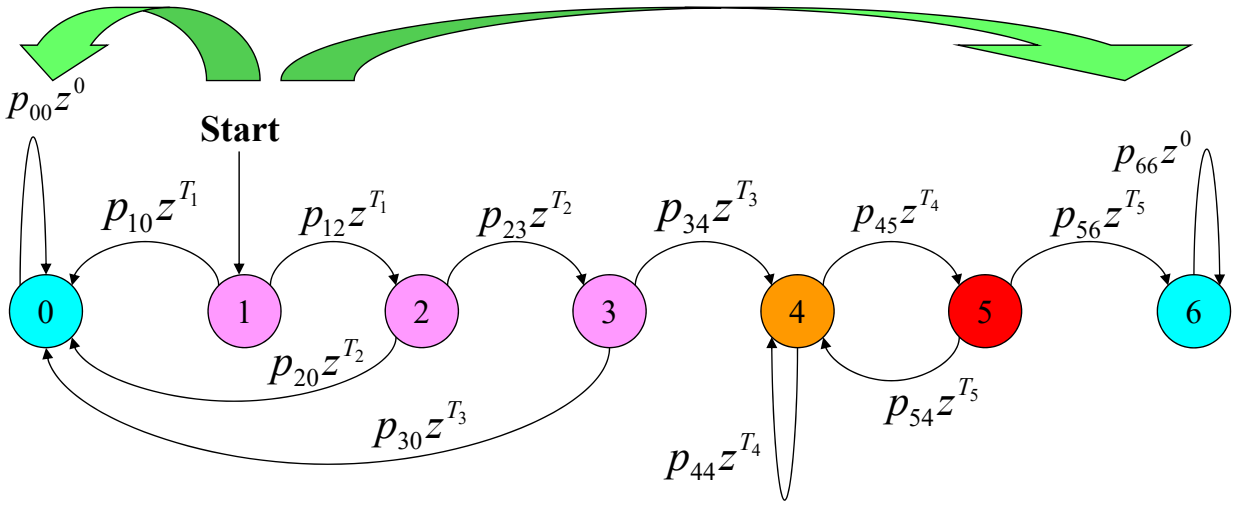

# MD Detection – Synchronization Time (Cont.)

- The probability of **detecting the correct phase cell**, $P_d$ is
  - The probability of passing from state 1 to the "enter code tracking mode" function
  - The probability from the "code tracking mode" (pass through state 4 and 5) to state 6 is **one**
    - No other path to an end state and the system is guaranteed to eventually reach an end state

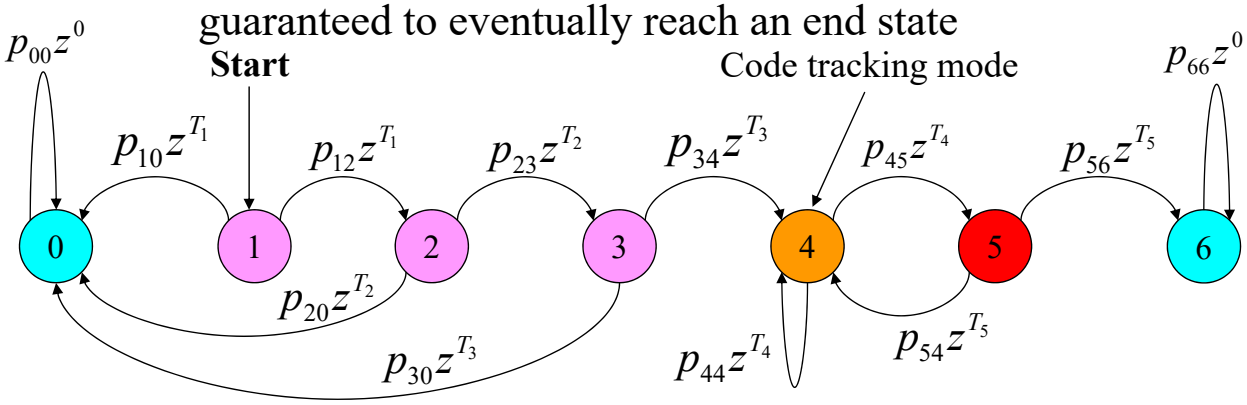




# MD Detection – Synchronization Time (Cont.)

- The probability of **detecting the correct phase cell**, $P_d$, is equal to the probability of passing from state 1 to state 6

$$P_d = \sum_{l \in L(1,6)} \Pr(l) = \sum_{l \in L(1,6)} B(l,z)_{z=1}$$

$$P_d = \left(y_{16}\right)_{z=1}$$

  - $P_d$ is the element of the first row and second column of

$$\left(\mathbf{Y}\right)_{z=1} = \left[\left(\mathbf{I}-\mathbf{Q}\right)^{-1}\mathbf{R}\right]_{z=1}$$

# MD Detection – Synchronization Time (Cont.)

- To evaluate the average synchronization time: **two sets** of transition probabilities must be calculated
- For the **noise along** case:
  - To evaluate $T_{da}$
- For the **signal plus noise** case:
  - To evaluate $T_i$ (the average time used in evaluating the correct phase cell): identical to the calculation of $T_{da}$ except the **transition probabilities**
  - To evaluate $P_d$
- Note that average values for $T_{da}$ and $T_i$ can be used to calculate $\overline{T}_s$, but cannot be used to calculate the variance $\sigma^2_{T_s}$

$$\overline{T}_s = (C-1)T_{da}\left(\frac{2-P_d}{2P_d}\right)+\frac{T_i}{P_d}$$



# Sequential Detection

# Sequential Detection

- Sequential detection is used to detect the signal power reliably but without generating excessive false alarms, it includes
  - The **envelope detector**
  - The **sequential detection processor**

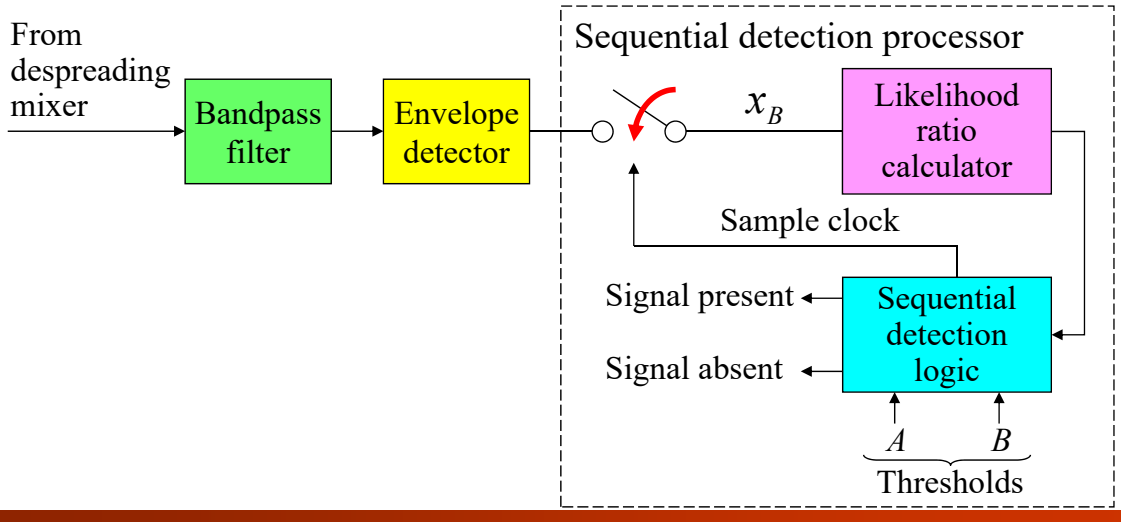




# Sequential Detection (Cont.)

- For any $K = 1, 2, \ldots$, let $\mathbf{x}_K = (x_1, x_2, x_3, \ldots, x_K)$ denote a sequence of samples of the envelope detector output
  - When **signal** is present: the joint pdf of samples is $p_s(\mathbf{x}_K)$
    - $p_s(\mathbf{x}_K)$ depends on the input signal power
  - When **noise alone** is present: the joint pdf of samples is $p_n(\mathbf{x}_K)$
- The samples are taken **one at a time** and input to the sequential detection processor
- After each sample, the **likelihood ratio** calculator computes:

$$\Lambda(x_1, x_2, \cdots, x_K) = \frac{p_s(\mathbf{x}_K)}{p_n(\mathbf{x}_K)}$$

# Sequential Detection (Cont.)

- The likelihood ratio is input to the sequential detection logic and compares with an **upper** threshold $A$ and a **lower** threshold $B$, where $A > B$
  - The $A$ and $B$ are selected to achieved a specific reliability
  - If $\Lambda(\mathbf{x}_K) > A$: the signal is declared **present** and the **test ends**
  - If $\Lambda(\mathbf{x}_K) < B$: the signal is declared **absent** and the **test ends**
  - If $B < \Lambda(\mathbf{x}_K) < A$:
    - **No decision is made** about the present or absent of the signal
    - The test is **continuous** by taking another sample and calculating another likelihood ratio



# Sequential Detection (Cont.)

- The likelihood ratio indicates whether the sequence of samples is more likely to have resulted from either
  - Signal and noise: $\Lambda(\mathbf{x}_K) > 1.0$, or
  - Noise alone: $\Lambda(\mathbf{x}_K) < 1.0$

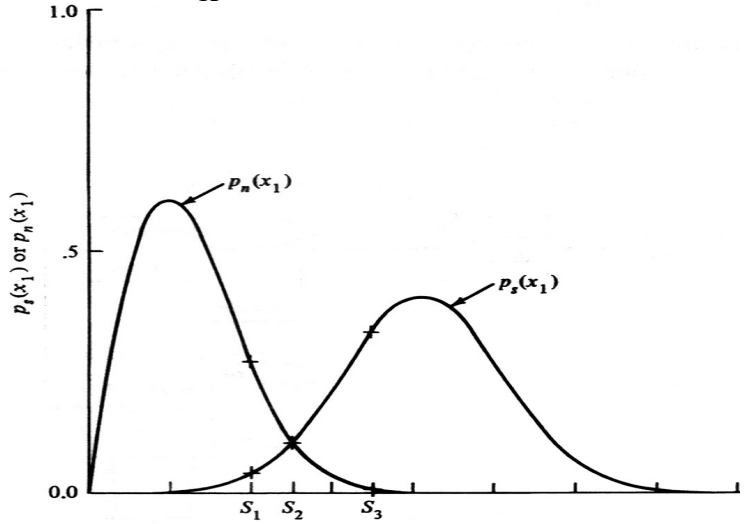

# Sequential Detection (Cont.)

- According to Fig. 5-20: $p_s(x_1)$ and $p_n(x_1)$
  - For sample $S_1$: $\Lambda(x_1) << 1.0$,
  - For sample $S_2$: $\Lambda(x_1) = 1.0$
  - For sample $S_3$: $\Lambda(x_1) >> 1.0$
- Assume that the samples of the envelope detector output are spaced sufficiently in time
  - They may be considered **independent**

  $\Rightarrow$ The joint pdf's are **products** of single sample pdf's

$$p_s(\mathbf{x}_K) = \prod_{k=1}^{K} p_s(x_k)$$

$$p_n(\mathbf{x}_K) = \prod_{k=1}^{K} p_n(x_k)$$



# Sequential Detection (Cont.)

$$\Lambda(\mathbf{x}_K) = \prod_{k=1}^{K} \lambda(x_k)$$

- where $\lambda(x_k) \triangleq \dfrac{p_s(x_k)}{p_n(x_k)}$

- When signal is **present** at the **design point SNR**
  - Envelope detector samples usually result in $\lambda(x_k) > 1.0$

  $\Rightarrow$ The product $\Lambda(\mathbf{x}_K)$ grows with increasing $K$
  - As $K \to \infty$, $\Lambda(\mathbf{x}_K)$ will always cross the upper threshold
- When **no signal** is present
  - Envelope detector samples usually result in $\lambda(x_k) < 1.0$

  $\Rightarrow$ The product $\Lambda(\mathbf{x}_K)$ approaches zero as $K$ increases
  - As $K \to \infty$, $\Lambda(\mathbf{x}_K)$ will always cross the lower threshold

# Sequential Detection (Cont.)

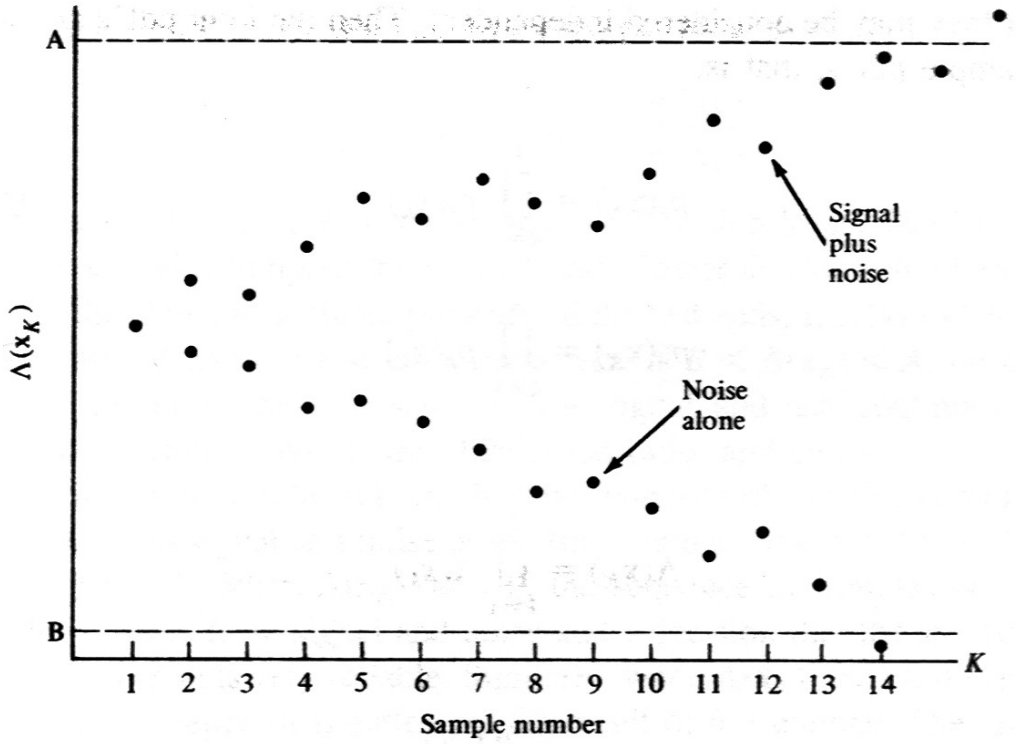




# Sequential Detection (Cont.)

- When signal is indeed present:
  - A **missed detection** occurs whenever $\Lambda(\mathbf{x}_K)$ crosses the lower threshold before crossing the upper threshold
- When no signal is present:
  - A **false alarm** occurs whenever $\Lambda(\mathbf{x}_K)$ crosses the upper threshold before crossing the lower threshold

# Thresholds and Error Probability

- Assume that the functions $p_s(\mathbf{x}_K)$ and $p_n(\mathbf{x}_K)$ are known for a particular SNR
- Let $\Gamma_1$ denote the set of all vectors that result in **a decision that signal is present**
  - For every $\mathbf{x}_K \in \Gamma_1$
$$A \le \frac{p_s(\mathbf{x}_K)}{p_n(\mathbf{x}_K)}$$
  - $\Gamma_1$ is a vector set independent to the Hypothesis ("noise alone" or "signal plus noise")
- When the bandpass filter output is **noise alone**, a false alarm occurs for any $\mathbf{x}_K \in \Gamma_1$
$$P_{fa} = \int_{\mathbf{x}_K \in \Gamma_1} p_n(\mathbf{x}_K)\, d\mathbf{x}_K$$



# Thresholds and Error Probability (Cont.)

- When the bandpass filter output is **signal plus noise**, a correct detection occurs for any $\mathbf{x}_K \in \Gamma_1$
$$P_d = \int_{\mathbf{x}_K \in \Gamma_1} p_s(\mathbf{x}_K)\, d\mathbf{x}_K$$

$$A \le \frac{p_s(\mathbf{x}_K)}{p_n(\mathbf{x}_K)} \Rightarrow p_s(\mathbf{x}_K) \ge A p_n(\mathbf{x}_K)$$

$$\int_{\mathbf{x}_K \in \Gamma_1} p_s(\mathbf{x}_K)\, d\mathbf{x}_K \ge A \times \int_{\mathbf{x}_K \in \Gamma_1} p_n(\mathbf{x}_K)\, d\mathbf{x}_K$$

$$P_d \ge A P_{fa}$$

# Thresholds and Error Probability (Cont.)

- Let $\Gamma_2$ denote the set of all vectors that result in **a decision that signal is absent**
  - For every $\mathbf{x}_K \in \Gamma_2$

$$\frac{p_s(\mathbf{x}_K)}{p_n(\mathbf{x}_K)} \leq B$$

  - $\Gamma_2$ is a vector set independent to the Hypothesis ("noise alone" or "signal plus noise")
- When the bandpass filter output is **noise alone**, a correct dismissal occurs for any $\mathbf{x}_K \in \Gamma_2$

$$1 - P_{fa} = \int_{\mathbf{x}_K \in \Gamma_2} p_n(\mathbf{x}_K)\, d\mathbf{x}_K$$



# Thresholds and Error Probability (Cont.)

- When the bandpass filter output is **signal plus noise**, a missed detection occurs for any $\mathbf{x}_K \in \Gamma_2$

$$1 - P_d = \int_{\mathbf{x}_K \in \Gamma_2} p_s(\mathbf{x}_K)\, d\mathbf{x}_K$$

$$\frac{p_s(\mathbf{x}_K)}{p_n(\mathbf{x}_K)} \leq B \Rightarrow p_s(\mathbf{x}_K) \leq B p_n(\mathbf{x}_K)$$

$$\int_{\mathbf{x}_K \in \Gamma_2} p_s(\mathbf{x}_K)\, d\mathbf{x}_K \leq B \times \int_{\mathbf{x}_K \in \Gamma_2} p_n(\mathbf{x}_K)\, d\mathbf{x}_K$$

$$1 - P_d \leq B\left(1 - P_{fa}\right)$$

# Thresholds and Error Probability (Cont.)

- For a pair of desired $P_d$ and $P_{fa}$, we have $A \le P_d / P_{fa}$
- If a smaller $A$ is applied, we have a larger set of $\Gamma_1$
  - A larger $P_d$ and a larger $P_{fa}$ are obtained
  - Not all $A \le P_d / P_{fa}$ can achieve the desired $P_d$ and $P_{fa}$

**Only achieve the desired ratio $P_d / P_{fa}$**

- For a pair of desired $P_d$ and $P_{fa}$, we have $B \ge (1 - P_d)/(1 - P_{fa})$
- If a larger $B$ is applied, we have a larger set of $\Gamma_2$
  - A larger $(1 - P_d)$ and a larger $(1 - P_{fa})$ are obtained
  - A smaller $P_d$ and a smaller $P_{fa}$ are obtained
  - Not all $B \ge (1 - P_d)/(1 - P_{fa})$ achieve the desired $P_d$ and $P_{fa}$
- To achieve the desired $P_d$ and $P_{fa}$, we make the equality hold

$$P_d = AP_{fa} \qquad 1 - P_d = B\left(1 - P_{fa}\right)$$



# Thresholds and Error Probability (Cont.)

- To find the thresholds $A$ and $B$
  - Functions of $P_d$ and $P_{fa}$

$$P_d = AP_{fa} \Rightarrow A = P_d / P_{fa}$$

$$1 - P_d = B\left(1 - P_{fa}\right) \Rightarrow B = \left(1 - P_d\right)/\left(1 - P_{fa}\right)$$

- To determine the $P_d$ and $P_{fa}$:
  - Functions of $A$ and $B$

$$P_{fa} = \frac{1 - B}{A - B}$$

$$P_d = A\left(\frac{1 - B}{A - B}\right)$$

# Synchronization by Using Matched Filters



## Synchronization Using a Matched Filter

- In all of the synchronization schemes discussed above, the **duration of the correlation** is a function of:
  - The desired acquisition performance ($P_d$, $P_{fa}$)
  - The received signal-to-noise ratio
  - The detection strategy (fixed integration time, multiple-dwell, or sequential detection)
- Assume that the duration of the correlation is $T_i = KT_c$
  - $K$ may be from 10 to several thousand
- The spreading code phase is declared correct or incorrect after the correlation
- If the code phase is incorrect, the synchronization processor steps to another phase for evaluation

# Synchronization Using a Matched Filter (Cont.)

- The average synchronization time, given a code phase uncertainty of $M$ chips, is approximately

$$\overline{T_s} = \frac{2M+1}{2} T_i = \frac{2M+1}{2} KT_c \approx MKT_c$$

  - where it is assumed that $P_d = 1.0$, $P_{fa} = 0.0$ and the serial-search step size is ½ chips $\Rightarrow C = 2M$

$$T_{da} = \left(1 - P_{fa}\right) T_i + P_{fa}\left(T_i + T_{fa}\right) = T_i + T_{fa} P_{fa} = T_i$$

$$\begin{aligned} \overline{T_s} &= (C-1) T_{da} \left( \frac{2 - P_d}{2P_d} \right) + \frac{T_i}{P_d} \\ &= \frac{2M-1}{2} T_i + T_i = \frac{2M+1}{2} T_i \end{aligned}$$



# Synchronization Using a Matched Filter (Cont.)

- If the time to evaluate each phase cell can be reduces, the average synchronization time can be reduces
- The matched-filter synchronizers reduce the time required to evaluated a phase cell from $KT_c$ to approximately $T_c$
- Fig. 5-31 is a top-level block diagram of a **DSSS receiver**
  - The received signal is input to the spreading **code tracking loop** and to the on-time despreader for **data detection**
  - The received signal is input to a bandpass filter (matched to **a segment of the spreading waveform**)
  - When a matched spreading waveform is received, the matched filter produces a **output pulse**
  - The spreading code generator is **started at the correct phase** when the matched filter output pulse is sensed

# Synchronization Using a Matched Filter (Cont.)

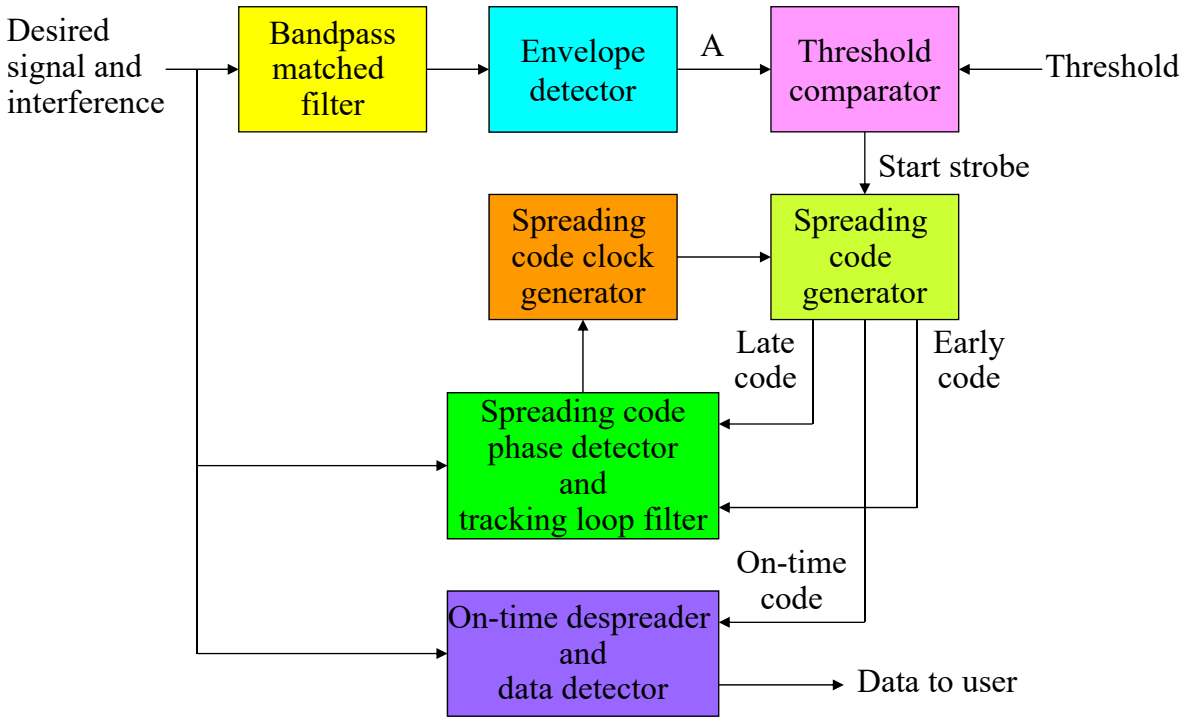




# Comparison: Serial Search Synchronizer

- For serial search synchronizers:
  - Use **active** correlation and energy detection
  - Each received chip is used in the evaluation of **a single code phase** in stepped serial search

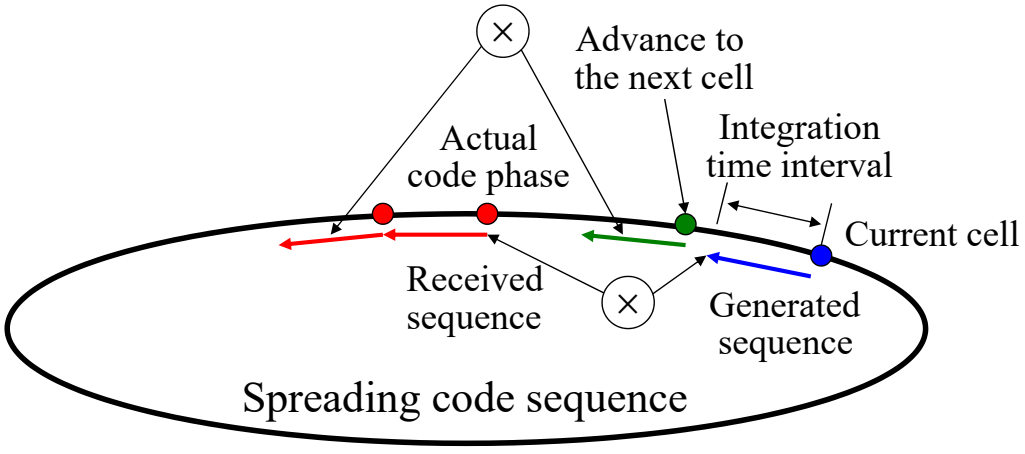

# Synchronization Using a Matched Filter (Cont.)

- For matched-filter synchronizers:
  - Uses **passive** correlation within the filter
  - Each received chip is used in the evaluation of **many code phases**
- But the flexibility of matched-filter synchronizers is poor

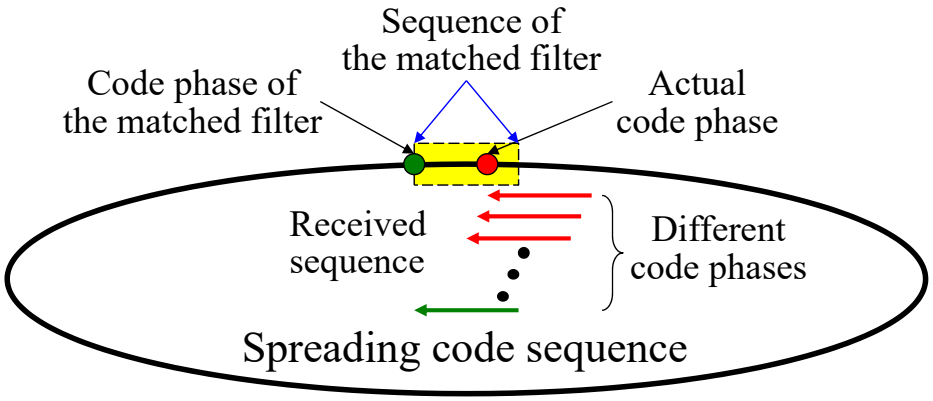




# Synchronization Using a Matched Filter (Cont.)

- Suppose that the desired sequence of the matched filter is
  - "01110101"
- In the received code sequence:
  - Each received chip is used in the evaluation of **16 code phases**
  - The step size of a phase cell is assumed to be ½ chip (8×2 cells)

**Is there any limitation on the sequence period?**
**The sequence period *N* cannot be too large!**

**" … ": Sequence within filter**

0111010"10010100"
0011101"01001010"
1001110"10100101"
1100111"01010010"
0110011"10101001"
0011001"11010100"
0001100"11101010"
0000110"01110101"

Time

- The implementation of matched filter includes bandpass or lowpass matched filter
  - These two implementations are equivalent and produce identical outputs when the inputs are identical

# Matched Filter Implementations

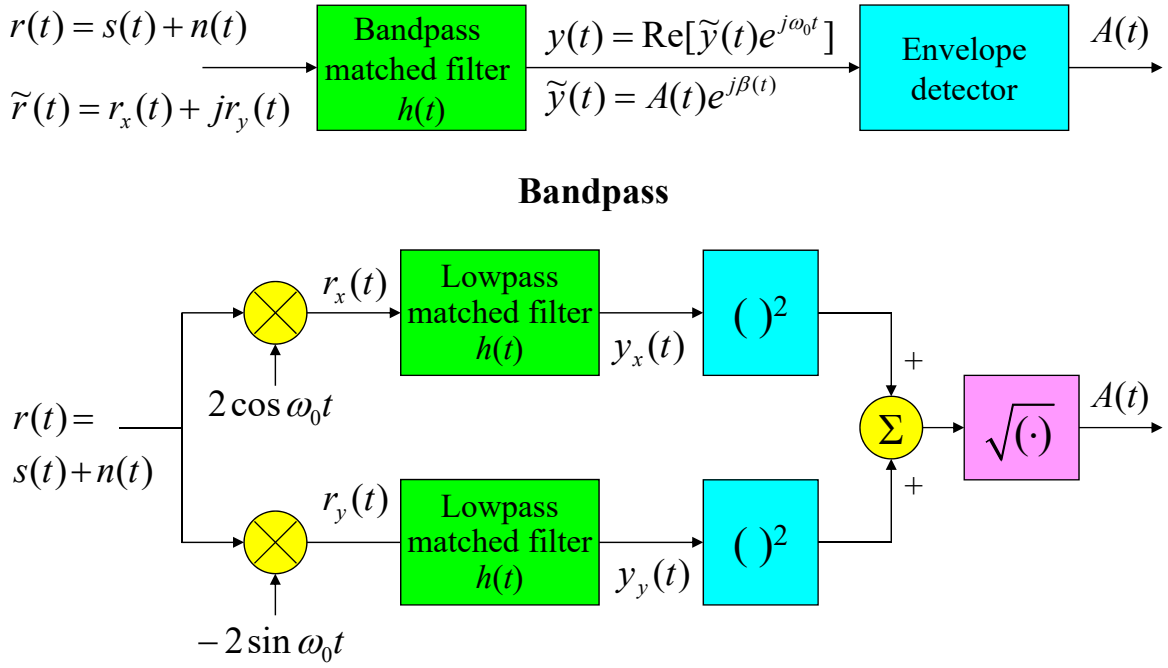




# Digital Implementations of Matched Filter

