通訊系統 (II)

國立清華大學電機系暨通訊工程研究所
蔡育仁
台達館 821 室
Tel: 62210
E-mail: yrtsai@ee.nthu.edu.tw

Chapter 10
Spread-Spectrum Modulation

Introduction

Introduction

- **Spread-spectrum** modulation refers to any modulation scheme that produces a spectrum for the transmitted signal **much wider** than the bandwidth of the information being transmitted
  - To provide some degree of resistance to interference and jamming (**jamming resistance, JR**)
  - To provide a means for masking the transmitted signal in the background noise (**low probability of intercept, LPI**)
  - To provide resistance to the interference from multiple transmission paths (**anti-multipath interference**)
  - To permit the access of a common channel by more than one user (**multiple access capability ⇒ CDMA**)
  - To provide a means for measuring the distance between two points or time difference (**ranging, channel sounding**)

Standard Components of Commun. Systems

- The standard components of a communications system are
  - Information source, including the source encoder
  - Data modulator
  - Power amplification (including the transmit antenna for radio communications)
  - Receiver front-end (including the receive antenna for radio communications)
  - Timing and synchronization
  - Data demodulator
  - Information sink, including the source decoder

Nonstandard Components of Commun. Systems

- The nonstandard components of communications systems may include
  - Encryptor
  - **Channel encoder**
  - **Spread-spectrum modulator**
  - **Spread-spectrum despreader**
  - **Channel decoder**
  - Decryptor
- Items 2 through 5 are standard in a spread-spectrum communications system

Digital Communications System

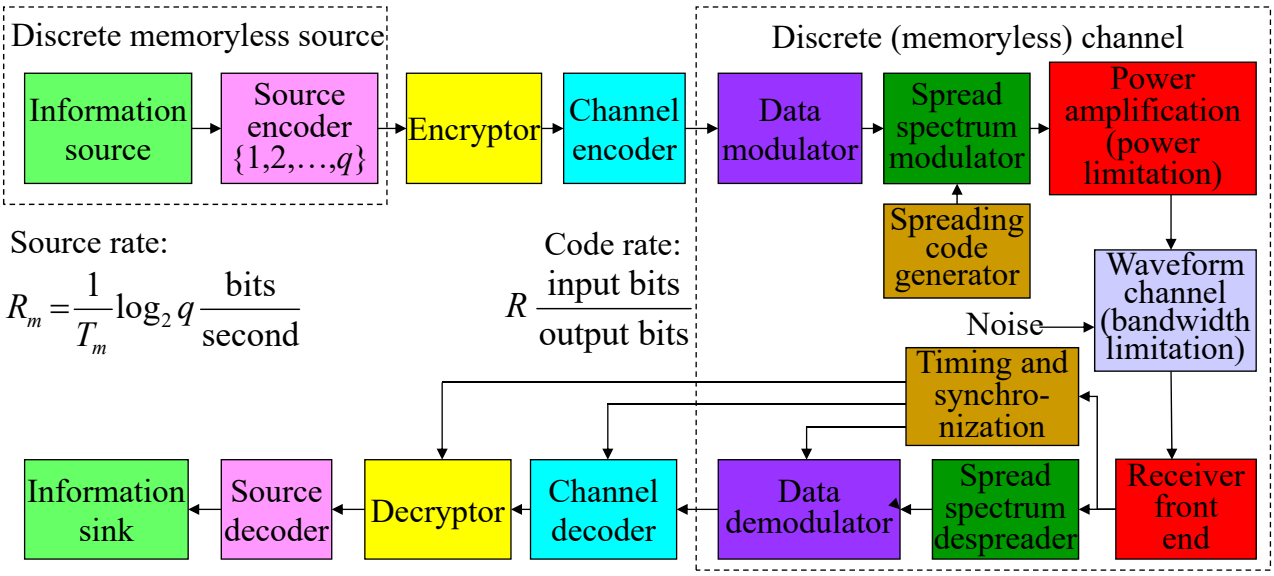

Functional Blocks of SS Systems

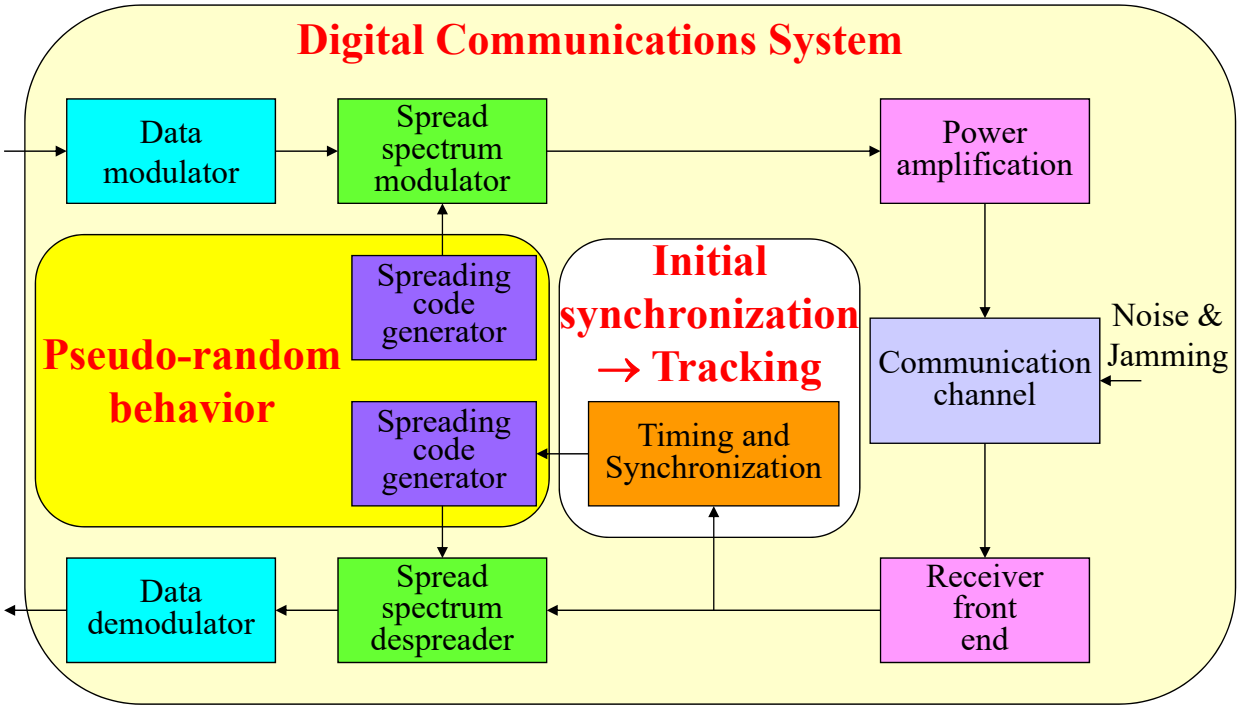

Some Applications of Spread-Spectrum

- **Communications:**
  - Military communications (unmanned aerial vehicle, UAV, Link 16)
  - Telecommunications (3G systems)
  - Data communications (Bluetooth, LoRa)
- **Wireless locating:**
  - Global Positioning System (GPS)
- **Consumer electronics:**
  - Wireless remote controls
- **Measurement equipment:**
  - Channel sounding
  - Distance (time) measuring

Global Positioning System

- 24 satellites in 6 **12-hour orbits** spaced uniformly around the earth
- Each satellite transmits two spread spectrum signals
  - 1575.42 MHz (L1 signal)
  - 1227.60 MHz (L2 signal)
- L1 signal (Coarse/Acquisition or C/A code):
  - Spread by a **short code** to make acquisition easy
  - Provide **coarse** positioning accuracy
- L2 signal (Precise or P code):
  - Spread by a **long code**
  - Provide **precise** positioning accuracy (about **a factor of ten** better than the coarse positioning accuracy)



Global Positioning System (Cont.)

- The C/A code is available for the public, and the P code is generally reserved for military applications.
- The C/A codes are **Gold codes** with a period of **1023 chips** at a transmission rate of **1.023 Mchip/s**
  - Repeat for every **1 ms**
  - Carrier a **50 bit/s** navigation message
  - A chip corresponds to a distance **293 m**
- The P code of a satellite is a sequence with a period of **6.187104×10^{12} chips** at a transmission rate of **10.23 Mchip/s**
  - A segment drawn from the **master P code** (38 segments)
  - Repeat for every **7 days**
  - A chip corresponds to a distance **29.3 m**

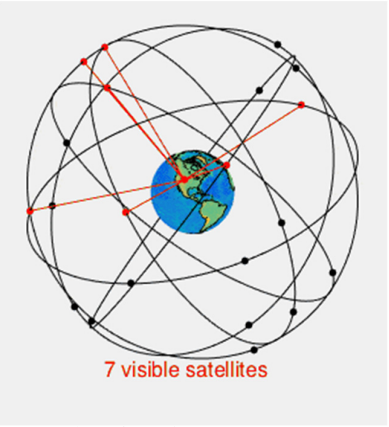

Mobile Cellular Systems

- **Third generation (3G) cellular systems** are all digital standards applying **CDMA** technology
  - **cdma2000** – US, **W-CDMA** – Europe

Parameter	**W-CDMA**	**cdma2000**
Carrier spacing	5 MHz	3.75 MHz
Chip rate	4.096 MHz	3.6864 MHz
Data modulation	BPSK	FW – QPSK; RV - BPSK
Power control frequency	1500 Hz	800 Hz
Frame duration	10 ms	20 ms (also 5, 30, 40)
Coding	Turbo and convolutional	Turbo and convolutional
Base stations synchronized?	Asynchronous	Synchronous
Forward link pilot	TDM dedicated pilot	CDM common pilot
Antenna beamforming	TDM dedicated pilot	Auxiliary pilot

Unlicensed Band Communication Systems

- **Unlicensed band** communication systems are generally applying spread spectrum technologies
  - **Frequency Hopping** or **Direct Sequence** spread spectrum
- WLAN (Wireless Local Area Network): IEEE 802.11b
- Bluetooth
- LoRa (Chirp Spread Spectrum)
- Unmanned Aerial Vehicles (UAV)/Drones Communications and Control
- Cordless Phone
- …

Basic Concepts of Spread Spectrum Modulation

Spread Spectrum Characteristics

- For a spread spectrum system, the modem must have the following characteristics:
  - The transmitted signal energy must occupy a bandwidth which is usually **much larger** than the information bit rate
  - The **demodulation** must be accomplished, in part, by correlating **the received signal** with **a replica of the signal** that is used in the transmitter to spread the information signal

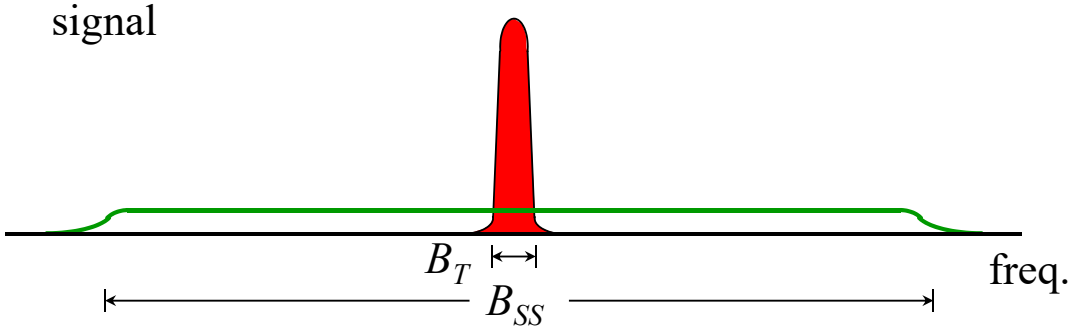

Types of Spread Spectrum Modulation

- There are various types of spread spectrum waveforms:
  - Linear FM (Chirp Signal)
  - Time Hopping Spread Spectrum (THSS)
  - Frequency Hopping Spread Spectrum (FHSS)
  - Direct Sequence Spread Spectrum (DSSS)
- The most practical and dominant spread spectrum modulations: **DSSS** and **FHSS** systems
- Some modulation techniques use a transmission bandwidth **much larger** than the minimum required transmission bandwidth **but are not spread spectrum** modulations:
  - Low-rate coding
  - Wideband frequency modulation (FM)

Random Properties of SS Modulation

- For **DSSS** and **FHSS** systems, the spread spectrum modulation generally involves some pseudo-random processing
  - **Pseudo-random** (**Pseudo-Noise**, PN) signals are required
  - The pseudo-random signals are generated based on one or a set of pseudo-random codes (PN codes)
- Pseudo-random codes have **noise-like properties** but are not actually purely random codes
- A pseudo-random code is a **periodic** code
  - Easy to generate
  - Having good random property
  - For example: **Maximum-length codes** and **Gold codes**

Processing Gain

- Spread spectrum techniques are very useful in solving a wide range of communications problems
- The amount of **performance improvement** that is achieved through the use of spread spectrum is defined as
  - The **processing gain** of the spread spectrum system
- The processing gain is often approximated as
  - The **ratio** of the spread bandwidth to the information rate

$$G_{\mathrm{P}} = B_{SS} / B_T = T / T_c$$

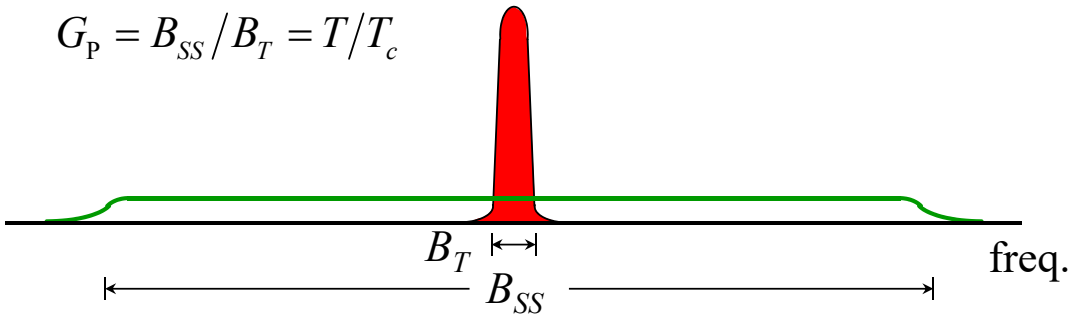

Direct-Sequence Spread Spectrum

Direct-Sequence Spread Spectrum

- Direct-sequence spread spectrum (DSSS): Bandwidth spreading is accomplished by **direct modulation** of a data-modulated carrier by **a wideband spreading signal** (or a spreading code)
- The spreading signal is chosen to have some properties:
  - For the **intended** receiver
    - It facilitates the demodulation
  - For other **unintended** receivers
    - The demodulation is as difficult as possible
- Consider a constant-envelope data-modulated carrier having the **power** P, the **radian frequency** ω_0, and the **data modulation phase** $\theta_d(t)$

$$s_d(t) = \sqrt{2P}\cos\left[\omega_0 t + \theta_d(t)\right]$$

BPSK Direct-Sequence Spread Spectrum

- The simplest form of DSSS employs **binary phase-shift keying** (BPSK) as the spreading modulation
- BPSK spreading is accomplished by multiplying $s_d(t)$ by a **binary spreading waveform** $c(t)$

$$s_t(t) = \sqrt{2P}c(t)\cos[\omega_0 t + \theta_d(t)]$$

- The **processing gain**

$$G_P = T/T_c = N$$

  - 1 symbol $\Rightarrow$ N chips

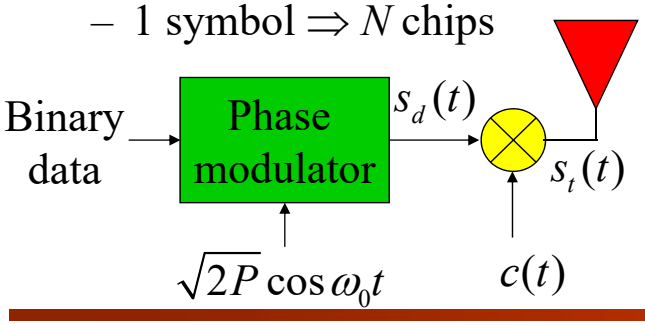

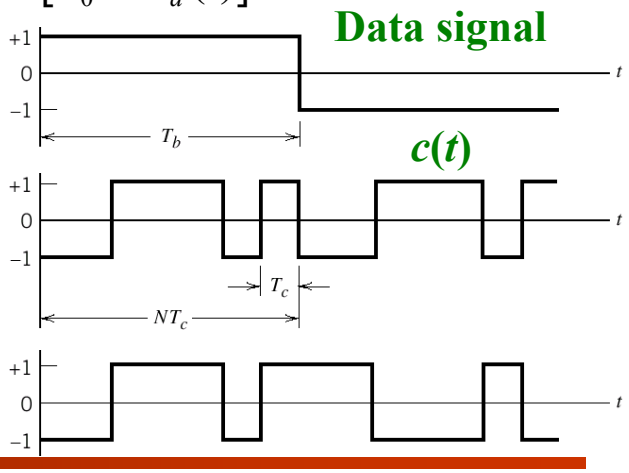

BPSK Direct-Sequence Spread Spectrum (Cont.)

- Assume that the signal is transmitted via a distortionless channel with a transmission delay T_d
- **Demodulation** is accomplished in part by **re-modulating** the received signal with the spreading code appropriately delayed
  - This is called **despreading process**
  - $\hat{T}_d$ is the receiver's best estimate of the transmission delay

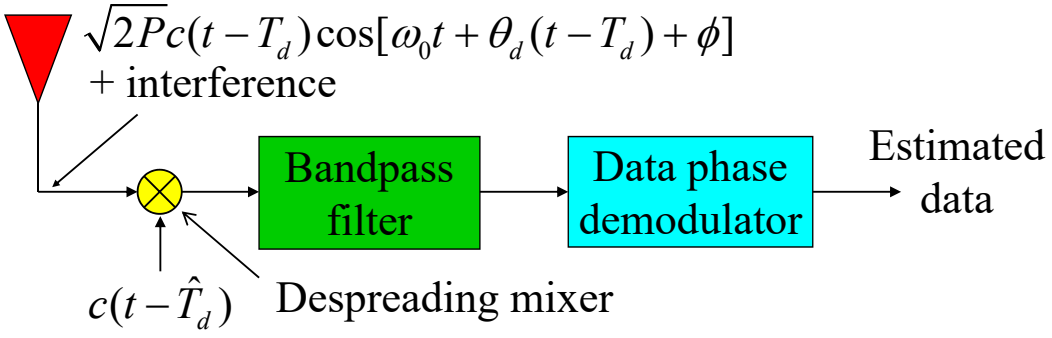

BPSK Direct-Sequence Spread Spectrum (Cont.)

- The signal component of the output of the despreading mixer is

$$s_{ds}(t) = \sqrt{2P}c\left(t - T_d\right)c\left(t - \hat{T}_d\right)\cos\left[\omega_0 t + \theta_d(t - T_d) + \phi\right]$$

- Because $c(t)$ is a **binary spreading waveform** $\Rightarrow c(t) = \pm 1$
  - If $\hat{T}_d = T_d$, $c(t - T_d) \times c(t - \hat{T}_d) = 1$
- When **correctly synchronized**, the output is equal to $s_d(t)$ except for a random phase ϕ, and $s_d(t)$ can be demodulated

$$s_{ds}(t) = \sqrt{2P}\cos\left[\omega_0 t + \theta_d(t - T_d) + \phi\right]$$

- There is **no restriction** on the form of $\theta_d(t)$, the data modulation **does not** also have to be BPSK

Power Spectral Density

- Assume that both the data modulation and spreading modulation are binary phase-shift keying
- Consider the power spectra of the signals:
  - The two-sided power spectral density of a BPSK carrier $s_d(t)$ with data symbol duration $\boldsymbol{T_b}$ is

$$S_d(f) = \frac{1}{2}PT_b\left\{\text{sinc}^2\left[\left(f - f_0\right)T_b\right] + \text{sinc}^2\left[\left(f + f_0\right)T_b\right]\right\}$$

  - The two-sided power spectral density of DSSS signal $s_t(t)$
    - It is also a binary phase-shift-keyed carrier with spreading code symbol duration $\boldsymbol{T_c}$ $(T_b \rightarrow T_c)$
    - T_c is often referred to as a spreading code **chip duration**

$$S_t(f) = \frac{1}{2}PT_c\left\{\text{sinc}^2\left[\left(f - f_0\right)T_c\right] + \text{sinc}^2\left[\left(f + f_0\right)T_c\right]\right\}$$

Power Spectral Density (Cont.)

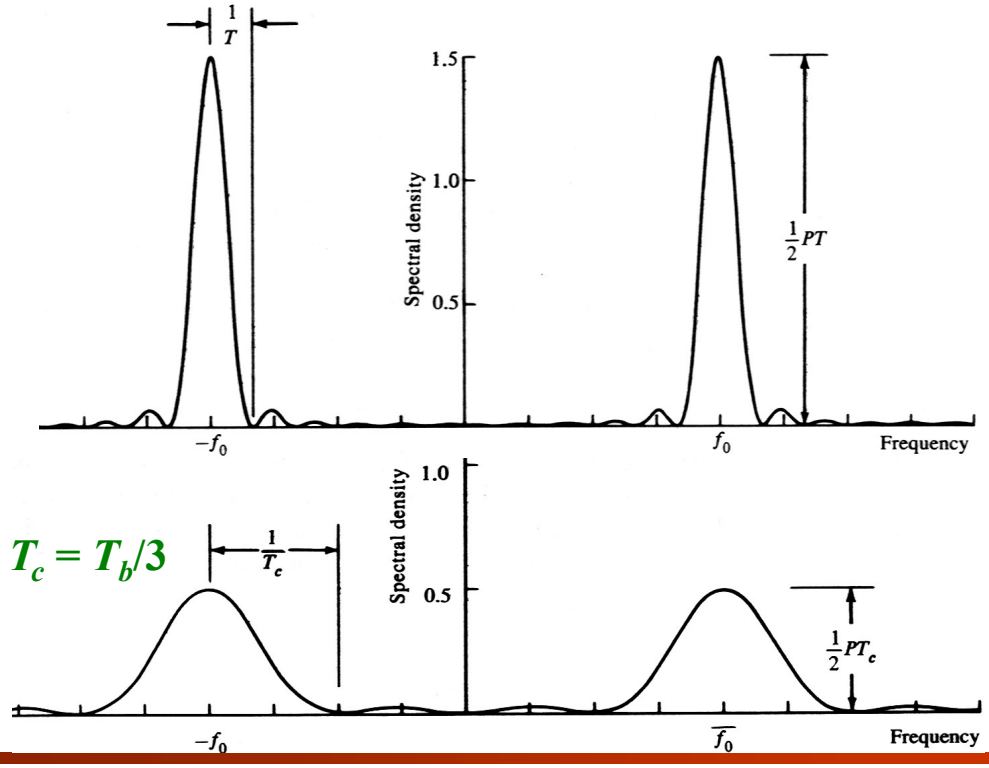

QPSK DSSS – Balanced QPSK

- One type of the QPSK spreading modulation is **balanced QPSK DSSS**
- Two spreading waveforms are used for signal spreading
  - $c_1(t)$: the **in-phase** spreading waveform
  - $c_2(t)$: the **quadrature** spreading waveform
- $c_1(t)$ and $c_2(t)$ are assumed to be **chip synchronous** but **independent** of one another

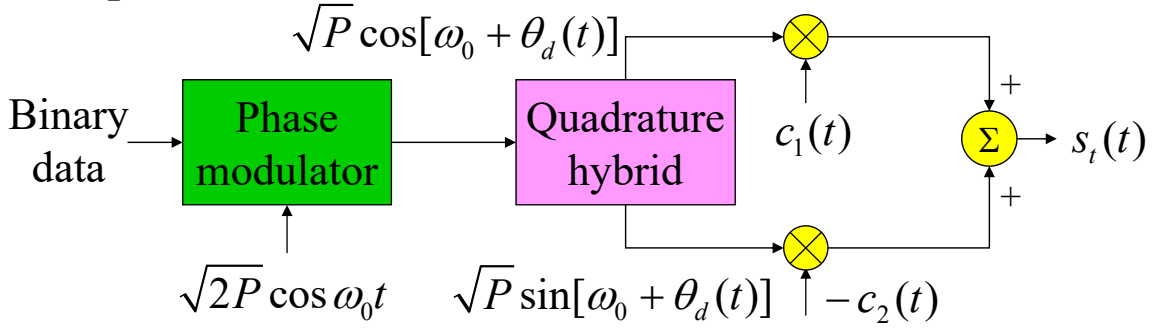

Frequency-Hop Spread Spectrum

Frequency-Hop Spread Spectrum

- Frequency-hop spread spectrum technique is to change the frequency of the carrier **periodically**
- The transmitted signal appears as a data-modulated carrier which is **hopping** from one frequency to the next
- Typically, each carrier frequency is selected from a set of $\mathbf{2}^{k}$ frequencies which are spaced approximately the width of the **data modulation bandwidth** apart
- The spreading code **does not** directly modulate the data-modulated carrier but is used to **control the sequence of carrier frequencies**
- At the receiver, the frequency hopping is removed by mixing with a local oscillator signal which is hopping **synchronously** with the received signal

Frequency-Hop Spread Spectrum – Transmitter

- The frequency synthesizer output $h_T(t)$ is a sequence of tones of duration T_c (hop duration)

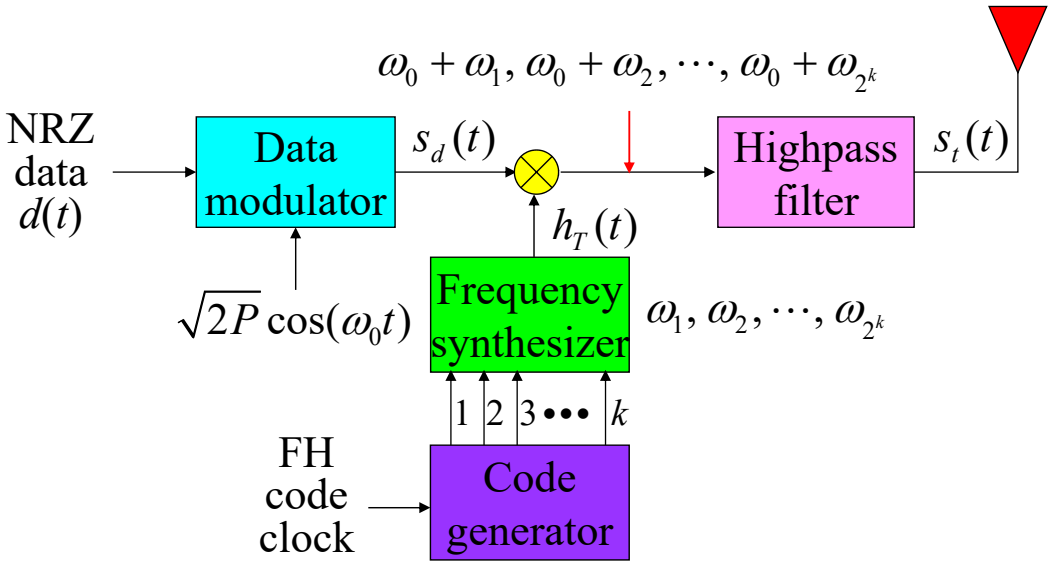

Frequency-Hop Spread Spectrum – Receiver

- At the receiver, the frequency de-hopper can recover the received FHSS signal to a **narrowband** signal

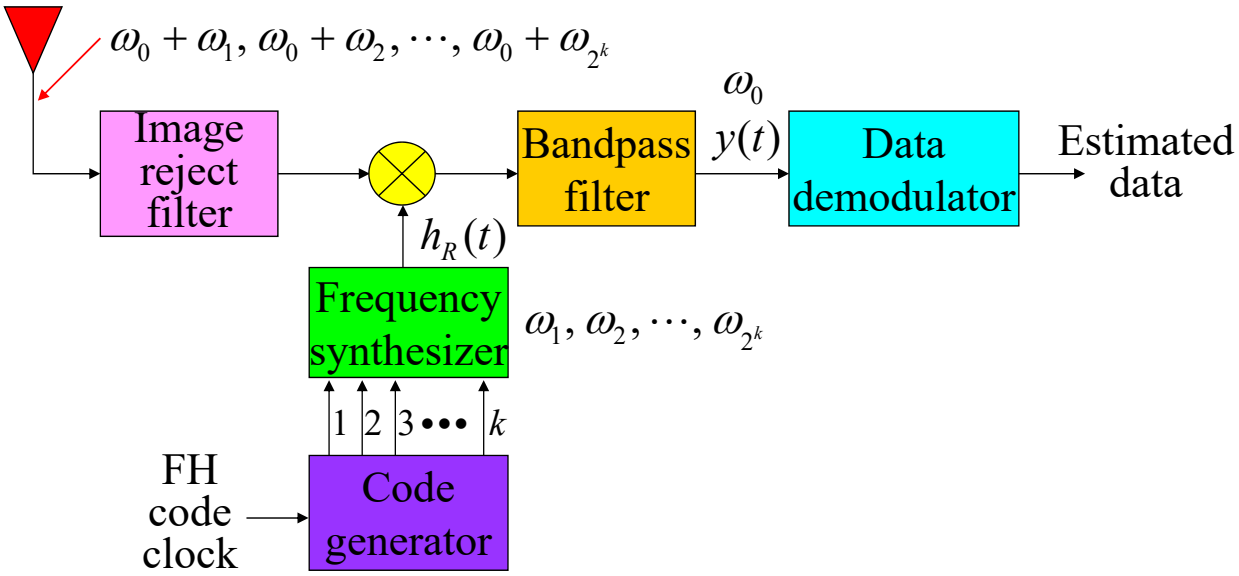

Frequency-Hop Spread Spectrum (Cont.)

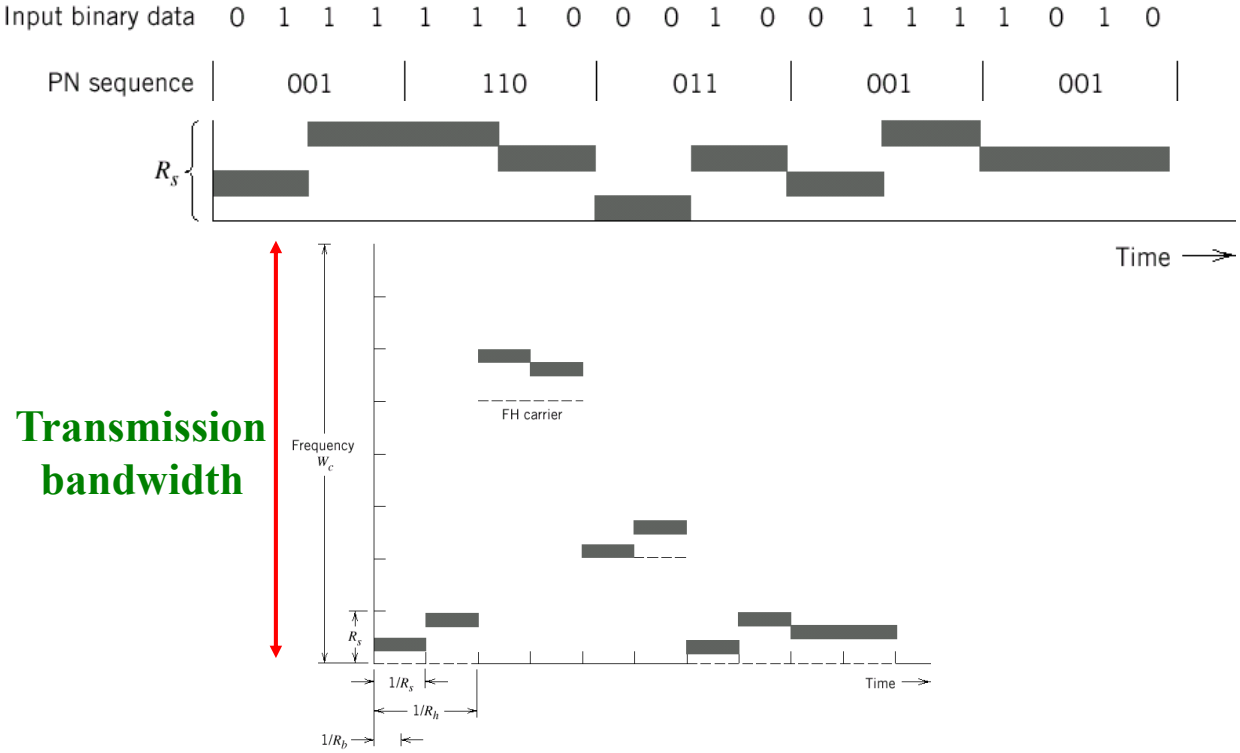

Pseudo-Noise (PN) Sequences

Spreading and Despreading Sequences

- The spreading and despreading waveform $c(t)$:
  - Usually generated using a **shift register**
  - The contents during each time interval is some **linear or nonlinear** combination of the register contents
- For SS systems to operate efficiently, the **phase** (**code phase**) of the received $c(t - T_d)$ must be **initially determined** and then **tracked** by the receiver
  - Choose $c(t)$ to have a **two-valued auto-correlation** function
    - **Correlated**: a large value; **Un-correlated**: a small value
    - The two-valued property is preferred but not necessary

Binary Shift-Register Sequences

- A **spreading code** is
  - The output of the binary shift-register generator
  - Having logical value: '**0**' or '**1**'
- A **spreading waveform** (signal) is
  - The function $c(t)$ actually input to the spreading or despreading modulator
  - Taking on values of **± 1 ('0' $\rightarrow$ +1; '1' $\rightarrow$ –1)**
- The **ideal** spreading code is
  - An **infinite** sequence of equally likely **random** binary digits
  - It is not feasible for practical applications
- The **periodic pseudorandom** codes (PN codes) are always employed

Binary Shift-Register Sequences (Cont.)

- A **feedback shift register** consists of an ordinary shift register made up of *m* flip-flops and a **logic circuit**
  - Form a **multiloop feedback circuit**
- At each pulse of the clock, the **state** of each flip-flop is **shifted to the next one** down the line.
- The logic circuit computes a **Boolean function** of the states of the flip-flops

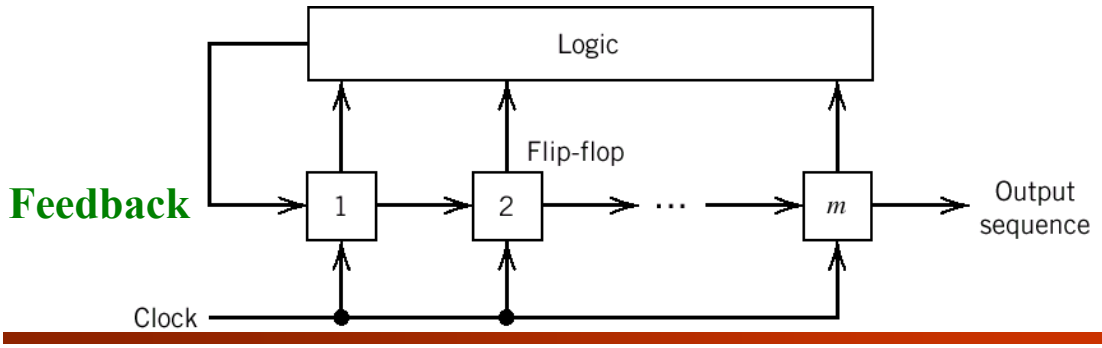

Binary Shift-Register Sequences (Cont.)

- The output sequence depends on the **logic circuit**
  - Different logic circuits lead to different **sequence periods**
- The **maximum** sequence period (sequence length) is $2^m - 1$
  - This type of PN sequences is known as the **maximum-length sequences** (**m-sequences**)

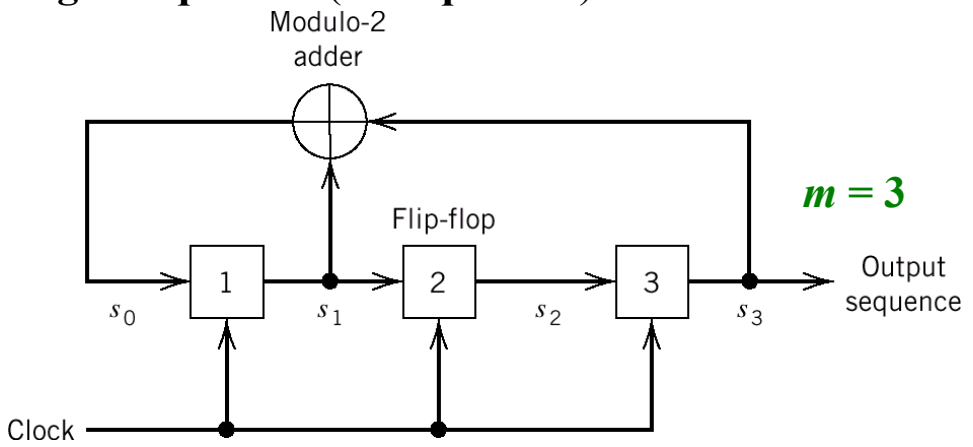

Maximal-Length Sequences

- The **maximum** sequence period (sequence length) is $N = 2^m - 1$
  - The autocorrelation This type of PN sequences is known as the **maximum-length sequences** (**m-sequences**)
  - An **m-sequences** has a good (**two-valued**) **auto-correlation** function
    - Correlated: a large value; Un-correlated: a small value

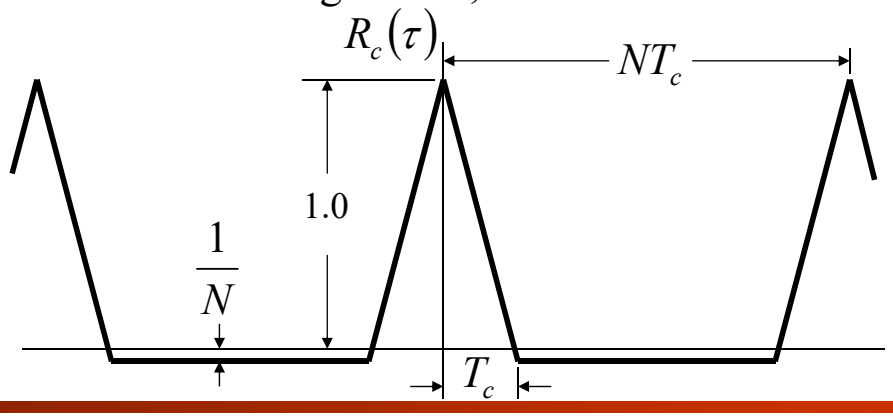

Gold Codes

- Channel resources may be shared by using spread spectrum techniques **(Code Division Multiple Access, CDMA)**
  - Users are each assigned a **different** spreading code
  - To find **a set** of codes with as **little mutual interference** as possible
- The cross-correlation (mutual interference) between two codes cannot be guaranteed for using two **arbitrary** m-sequences
  - Or using two **arbitrary** segments of the same m-sequence with a specific code phase offset
- Gold codes
  - Exist relatively **large** sets of codes
  - Have **well controlled** cross-correlation properties

Homework

- **You must give detailed derivations or explanations, otherwise you get no points.**
- Communication Systems, Simon Haykin **(4th Ed.)**
- 7.1;
- 7.2;
- 7.9;