通訊系統 (II)

國立清華大學電機系暨通訊工程研究所
蔡育仁
台達館 821 室
Tel: 62210
E-mail: yrtsai@ee.nthu.edu.tw

Chapter 5
Detection of Signals with Unknown Phase (Non-coherent Detection)

Introduction

Noncoherent Detection

- In previous study, we assume that the receiver is **perfectly synchronized** (in both **frequency** and **phase**) to the transmitter
  - The only **channel impairment** is **AWGN**
- In practice, there is also uncertainty due to the randomness of certain signal parameters; for example, a **time-variant channel**
  - Including the **channel distortion**, **propagation distance uncertainty**, **multiple-path propagation**, and **user velocity**
  - Induce **carrier phase uncertainty** at the receiver
- The **phase** may change in a way that the receiver cannot follow
  - The receiver **cannot estimate** the received carrier phase
  - The carrier phase may **change too rapidly** for the receiver to **track**

Noncoherent Detection (Cont.)

- **Phase synchronization** may be **too costly**
  - The designer may simply choose to **disregard the phase information** in the received signal
  - At the expense of some **degradation in noise performance**
- A digital communication receiver with no provision made for **carrier phase recovery** is said to be **noncoherent**
  - **Noncoherent detection**

Optimum Quadratic Receiver

Optimum Quadratic Receiver

- Consider a binary communication system, in which the transmitted signal is defined by (BFSK)

$$s_i(t) = \sqrt{2E/T}\cos(2\pi f_i t), \quad 0 \le t < T, i = 1, 2$$

  - E is the signal energy
  - T is the duration of the signaling interval
  - The carrier frequency f_i for symbol i is an integer multiple of $1/2T$ (for continuous phase FSK)
- Assuming the receiver operates **noncoherently** with respect to the transmitter, the received signal for an AWGN channel is

$$x(t) = \sqrt{2E/T}\cos(2\pi f_i t) + w(t), \quad 0 \le t < T, i = 1, 2$$

  - where the **carrier phase** is **unknown** at the receiver
- The local oscillator used at the receiver is $\cos(2\pi f_i t + \theta)$

Optimum Quadratic Receiver (Cont.)

- Assuming that there is **no information** about θ
  - **Uniform distribution**

$$f_\Theta(\theta) = \begin{cases} 1/2\pi, & 0 \le t < 2\pi \\ 0, & \text{otherwise} \end{cases}$$

- The binary **detection** problem to be solved is
  - Given the received signal $x(t)$ with an **unknown phase** θ
  - Design an optimum receiver for detecting symbol s_i represented by the signal component $\sqrt{2E/T}\cos(2\pi f_i t)$
- Define the **conditional likelihood function** of symbol s_i, given the carrier phase θ, as (Ch. 1: $\mathbf{x}\cdot\mathbf{s}_k$ for equal symbol energy)

$$L\left(s_i(\theta)\right) = \exp\left[\alpha \int_0^T x(t)\cos(2\pi f_i t + \theta)\, dt\right]$$

Depends on θ

The coefficient makes no difference

Optimum Quadratic Receiver (Cont.)

- Based on $\cos(x+y)=\cos(x)\cos(y)-\sin(x)\sin(y)$

$$\int_0^T x(t)\cos(2\pi f_i t+\theta)\,dt=\cos(\theta)\int_0^T x(t)\cos(2\pi f_i t)\,dt \quad \text{I}$$
$$-\sin(\theta)\int_0^T x(t)\sin(2\pi f_i t)\,dt \quad \text{Q}$$

- Define **Similar to Cartesian coordinate ⇒ polar coordinate**

$$l_i=\left\{\left[\int_0^T x(t)\cos(2\pi f_i t)\,dt\right]^2+\left[\int_0^T x(t)\sin(2\pi f_i t)\,dt\right]^2\right\}^{1/2}$$

$$\beta_i=\tan^{-1}\left(\int_0^T x(t)\sin(2\pi f_i t)\,dt\Big/\int_0^T x(t)\cos(2\pi f_i t)\,dt\right)$$

$$\int_0^T x(t)\cos(2\pi f_i t)\,dt=l_i\cos(\beta_i);\quad \int_0^T x(t)\sin(2\pi f_i t)\,dt=l_i\sin(\beta_i)$$

- Then, we have

$$\int_0^T x(t)\cos(2\pi f_i t+\theta)\,dt=l_i\left[\cos(\theta)\cos(\beta_i)-\sin(\theta)\sin(\beta_i)\right]$$
$$=l_i\cos(\theta+\beta_i)$$

Optimum Quadratic Receiver (Cont.)

- **Averaging** $L(s_i(\theta))$ over all possible values of θ, we have

$$L(s_i)=\int_0^{2\pi}L(s_i(\theta))f_\Theta(\theta)\,d\theta=\frac{1}{2\pi}\int_0^{2\pi}\exp\left[\alpha l_i\cos(\theta+\beta_i)\right]d\theta$$

- Based on the modified Bessel function of the first kind of zero order

$$I_0(x)=\int_0^{2\pi}\exp(x\cos\psi)\,d\psi\Big/2\pi$$

- We finally have

$$L(s_i)=\frac{1}{2\pi}\int_0^{2\pi}\exp\left[\alpha l_i\cos(\theta+\beta_i)\right]d\theta$$
$$=\frac{1}{2\pi}\int_0^{2\pi}\exp\left[\alpha l_i\cos(\theta)\right]d\theta=I_0(\alpha l_i)$$

Optimum Quadratic Receiver (Cont.)

- For **binary transmission**, there are two hypotheses:
  - Hypothesis H_1, that signal $s_1(t)$ was sent
  - Hypothesis H_2, that signal $s_2(t)$ was sent
- The binary-hypothesis test may be formulated as follow:

$$I_0(\alpha l_1) \underset{H_2}{\overset{H_1}{\gtrless}} I_0(\alpha l_2)$$

Based on likelihood function

- Because the modified Bessel function $I_0(\cdot)$ is a **monotonically increasing** function, we may simplify the hypothesis test as

$$l_1^2 \underset{H_2}{\overset{H_1}{\gtrless}} l_2^2$$

- This **decision rule** is known as the **quadratic receiver**
  - The **rule** is independent of the value of E or N_0

Implementation of the Quadratic Receiver

- According to the definition of l_i, the implementation of the quadratic receiver is shown as follows:

$$l_i = \left\{ \left[\int_0^T x(t)\cos(2\pi f_i t)\, dt \right]^2 + \left[\int_0^T x(t)\sin(2\pi f_i t)\, dt \right]^2 \right\}^{1/2}$$

Equivalent to energy detection

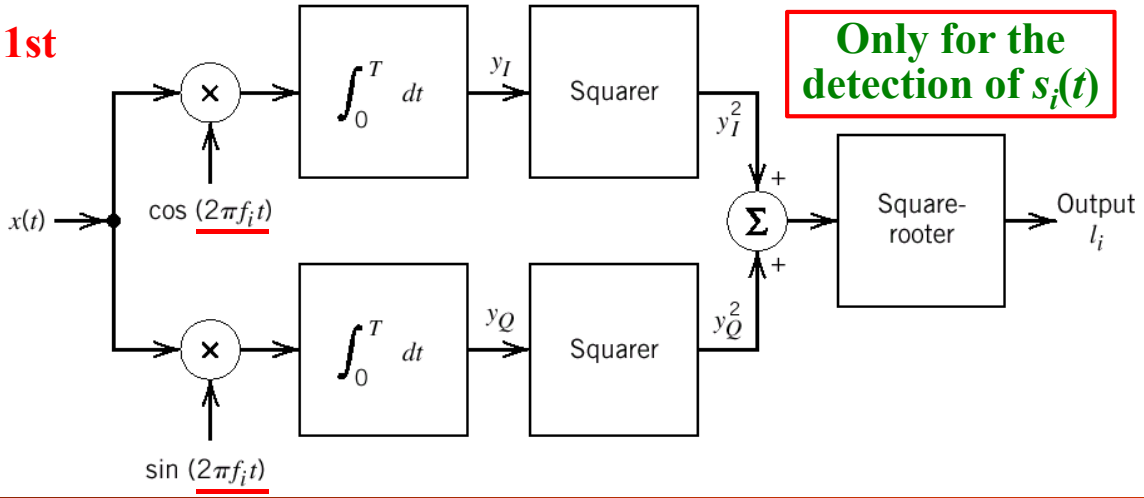

Equivalent Forms of the Quadratic Receiver

- One equivalent form of the quadrature receiver
  - Replace each **correlator** with an equivalent **matched filter**
  - In one branch, a filter matched to the signal **cos($2\pi f_i t$)**
  - In the other branch, a filter matched to **sin($2\pi f_i t$)**
  - Both of which are defined for the signaling interval $0 \le t \le T$

2nd

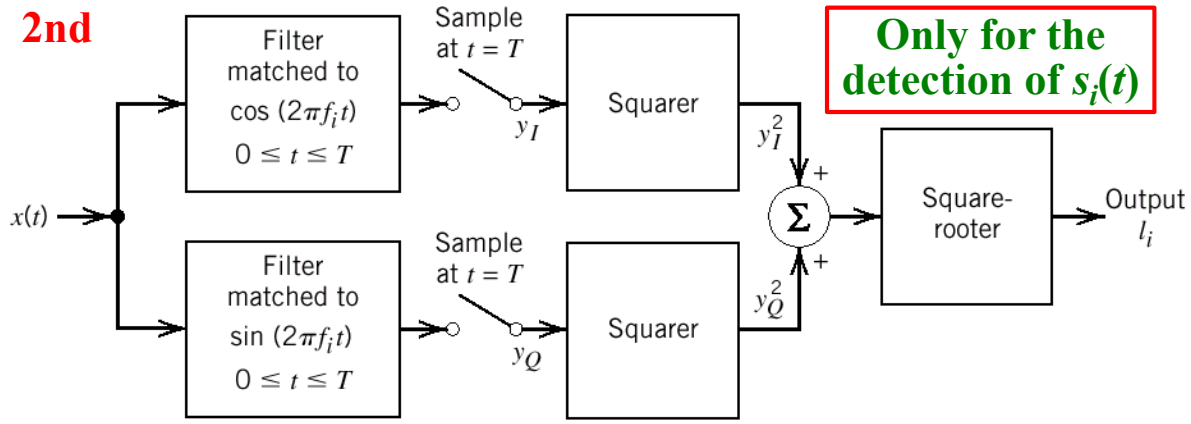

Equivalent Forms of the Quad. Receiver (Cont.)

- One equivalent form of the quadrature receiver
  - Use **noncoherent matched filter**
- A filter that is matched to $s(t) = \cos(2\pi f_i t + \theta)$ for $0 \le t \le T$
  - The **envelope** of the matched filter output is **unaffected** by the value of phase $\theta \Rightarrow$ Choose a matched filter with impulse response $\cos[2\pi f_i (T - t)]$ corresponding to $\boldsymbol{\theta = 0}$
- The output (at time T) of the filter followed by an envelope detector is the same as the quadrature receiver's output l_i

3rd **Noncoherent matched filter**

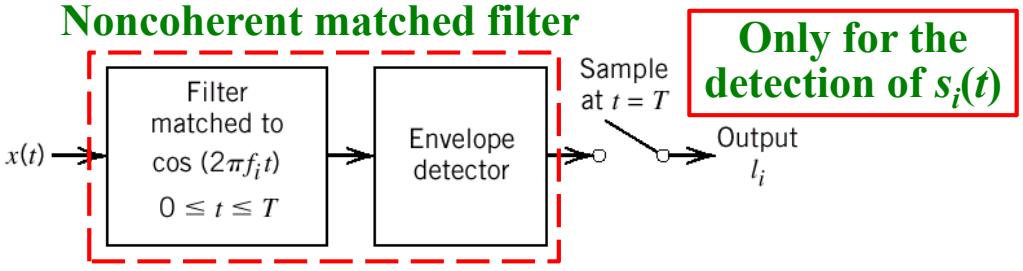

Noncoherent Orthogonal Modulation Techniques

Noncoherent Orthogonal Modulation

- With the noncoherent receiver structures, we may now proceed to study the noise performance of **noncoherent orthogonal modulation**
  - **Noncoherent binary FSK**
  - **Differential PSK** (called DPSK)

Noncoherent Orthogonal Modulation (Cont.)

- Consider a binary signaling scheme that involves the use of two **orthogonal** signals $s_1(t)$ and $s_2(t)$
  - Having the same energy E for the signaling interval $0 \le t \le T$
- Let $g_1(t)$ and $g_2(t)$ denote the **phase-shifted versions** of $s_1(t)$ and $s_2(t)$ that result from this transmission, respectively.
- It is assumed that the signals $g_1(t)$ and $g_2(t)$ **remain orthogonal** and have the same energy E
- In addition to carrier-phase uncertainty, the channel also introduces **AWGN** $w(t)$ of zero mean and PSD $N_0/2$
  - The received signal is

$$x(t) = \begin{cases} g_1(t) + w(t), & s_1(t) \text{ sent for } 0 \le t \le T \\ g_2(t) + w(t), & s_2(t) \text{ sent for } 0 \le t \le T \end{cases}$$

Noncoherent Orthogonal Modulation (Cont.)

- At the receiver, the quadrature receiver is used for detection
  - If the output amplitude l_1 **greater** (**smaller**) than the output amplitude l_2, the receiver decides in favor of $s_1(t)$ ($s_2(t)$)
  - When they are equal, a **random decision** is made

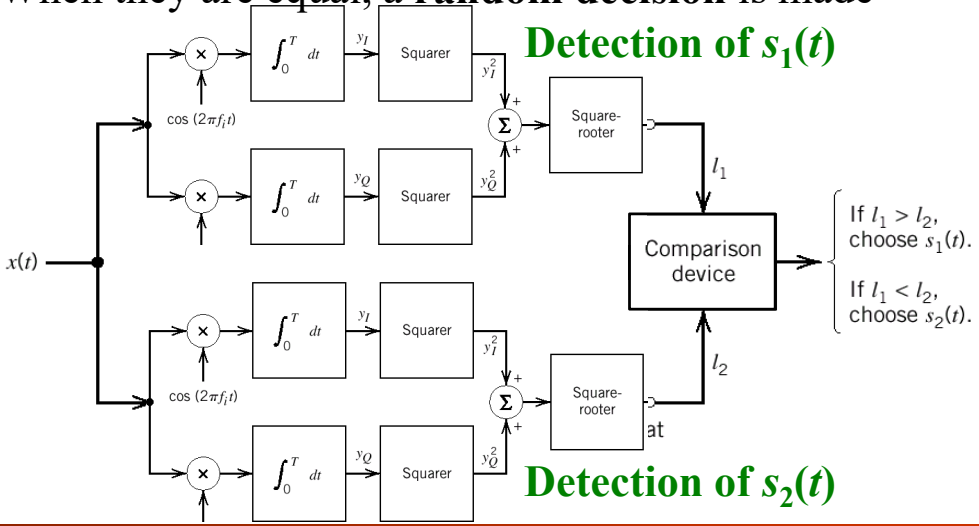

Noncoherent Orthogonal Modulation (Cont.)

- In the detection of $s_i(t)$
  - The **upper** (**in-phase**) path: $x(t)$ is correlated with $\psi_i(t)$
    - A **scaled version** of $s_i(t)$ with **zero carrier phase**
  - The **lower** (**quadrature**) path: $x(t)$ is correlated with $\hat{\psi}_i(t)$
    - The version that **shifts the carrier phase** by **–90°**

Orthogonal

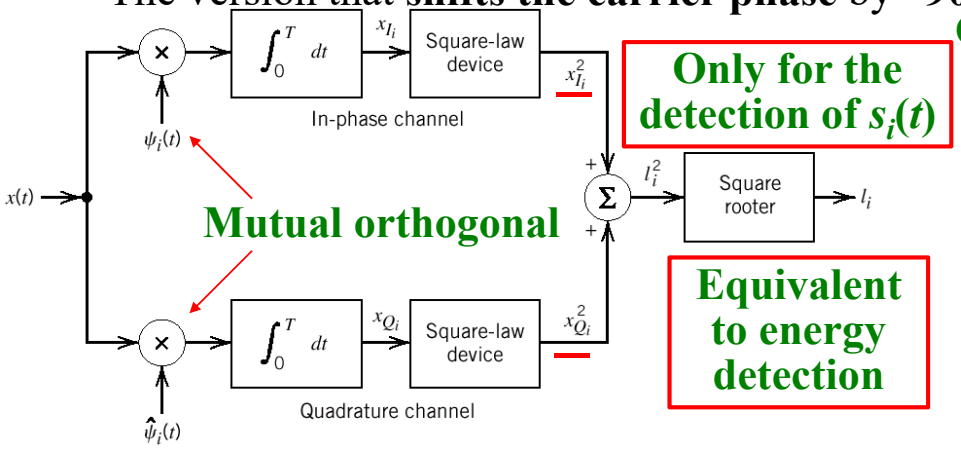

Noncoherent Orthogonal Modulation (Cont.)

- The signal $\hat{\psi}_i(t)$ is the **Hilbert transform** of $\psi_i(t)$
- Let $$\psi_i(t) = m(t)\cos\left(2\pi f_i t\right)$$
  - where $m(t)$ is a band-limited message signal
- Then the Hilbert transform is defined by

$$\hat{\psi}_i(t) = m(t)\sin\left(2\pi f_i t\right)$$

$$\cos\left(2\pi f_i t - \pi/2\right) = \sin\left(2\pi f_i t\right)$$

- An important property of Hilbert transformation is that a signal and its Hilbert transform are **orthogonal** to each other.

Probability of Error for Noncoherent Receiver

- Based on the quadrature receiver, **noise** at the output of each matched filter has **two degrees of freedom**:
  - **In-phase** and **quadrature**
- Given the phase θ, there are four noisy parameters that are **conditionally independent**, and also **identically distributed**.
  - (x_{I1}, x_{Q1}) in the upper path, and (x_{I2}, x_{Q2}) in the lower path
- The receiver has a **symmetric structure**: the error probability of transmitting $s_1(t)$ is the same as that of transmitting $s_2(t)$
- Suppose that signal $\boldsymbol{s_1(t)}$ **is transmitted** for the interval $0 \le t \le T$
  - If the channel noise $w(t)$ makes that $l_2 > l_1$

    $\Rightarrow$ The receiver decides in favor of $\boldsymbol{s_2(t)}$ rather than $s_1(t)$

    $\Rightarrow$ An error occurs

Prob. of Error for Noncoherent Receiver (Cont.)

- For the probability density function of the random variable L_2 (represented by sample value l_2), we have

$$l_2 = \sqrt{x_{I2}^2 + x_{Q2}^2} \Rightarrow L_2 = \sqrt{X_{I2}^2 + X_{Q2}^2}$$

  - The output of this matched filter is due to **noise alone**
  - The random variables X_{I2} and X_{Q2} are both **Gaussian distributed** with zero mean and variance $N_0/2$

$$f_{X_{I2}}(x_{I2}) = \frac{1}{\sqrt{\pi N_0}} \exp\left(-\frac{x_{I2}^2}{N_0}\right)$$

$$f_{X_{Q2}}(x_{Q2}) = \frac{1}{\sqrt{\pi N_0}} \exp\left(-\frac{x_{Q2}^2}{N_0}\right)$$

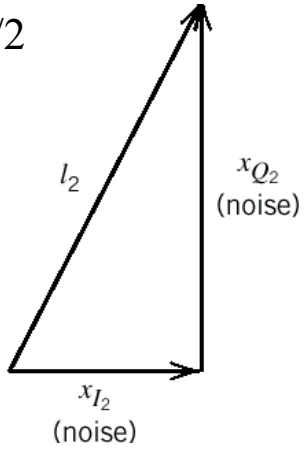

Prob. of Error for Noncoherent Receiver (Cont.)

- The **envelope** of a Gaussian process represented in polar form is **Rayleigh distributed** and independent of the phase θ
  - Therefore, the random variable L_2 has the following **probability density function**:

$$f_{L_2}(l_2) = \frac{2l_2}{N_0}\exp\left(-\frac{l_2^2}{N_0}\right), \quad l_2 \geq 0$$

- The **conditional** probability of error, **given l_1**, is the conditional probability that $l_2 > l_1$

$$P\left(l_2 > l_1 \middle| l_1\right) = \int_{l_1}^{\infty} f_{L_2}(l_2)\, dl_2 = \exp\left(-\frac{l_1^2}{N_0}\right)$$

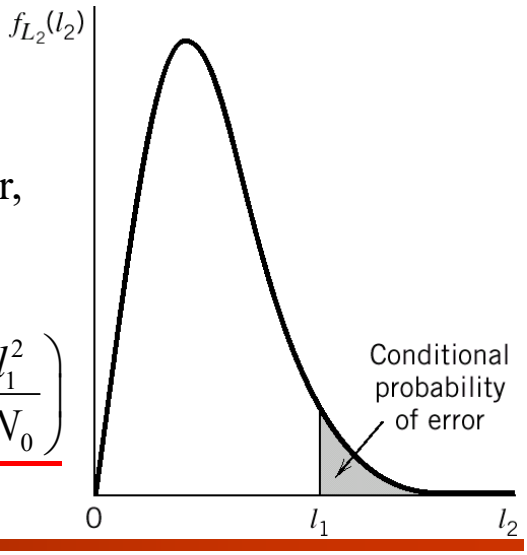

Prob. of Error for Noncoherent Receiver (Cont.)

- For the random variable L_1, we have

$$l_1 = \sqrt{x_{I1}^2 + x_{Q1}^2} \Rightarrow L_1 = \sqrt{X_{I1}^2 + X_{Q1}^2}$$

  - The output of this matched filter is due to **signal plus noise**
  - The signal energy may distribute within X_{I1} and X_{Q1}
- Both the random variables X_{I1} and X_{Q1} are **Gaussian distributed** with mean $\sqrt{E_I}$ and mean $\sqrt{E_Q}$, respectively, and variance $N_0/2$
  - where $E = E_I + E_Q$ is the symbol energy
- X_{I1} and X_{Q1} are independent

$$f_{X_{I1}}(x_{I1}) = \frac{1}{\sqrt{\pi N_0}}\exp\left[-\left(x_{I1} - \sqrt{E_I}\right)^2 / N_0\right]$$

$$f_{X_{Q1}}(x_{Q1}) = \frac{1}{\sqrt{\pi N_0}}\exp\left[-\left(x_{Q1} - \sqrt{E_Q}\right)^2 / N_0\right]$$

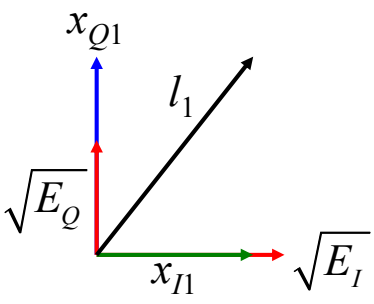

Signal plus noise

Prob. of Error for Noncoherent Receiver (Cont.)

- The standard approach is to find the probability density function of L_1 due to signal plus noise
  - However, this leads to rather **complicated calculations** involving the use of **Bessel functions**
- **Given x_{I1} and x_{Q1}**, the **conditional probability of error** is

$$P\left(l_2 > l_1 \left| x_{I1}, x_{Q1}\right.\right) = \exp\left(-\frac{l_1^2}{N_0}\right) = \exp\left(-\frac{x_{I1}^2 + x_{Q1}^2}{N_0}\right)$$

- Since X_{I1} and X_{Q1} are **statistically independent**, their joint pdf equals the **product** of their individual pdf
- Then, the **average probability of error** is represented as

$$P_e = \int_{-\infty}^{\infty}\int_{-\infty}^{\infty} P\left(l_2 > l_1 \left| x_{I1}, x_{Q1}\right.\right) f_{X_{I1}}(x_{I1}) f_{X_{Q1}}(x_{Q1})\, dx_{I1}\, dx_{Q1}$$

Prob. of Error for Noncoherent Receiver (Cont.)

- The integrand of the **average probability of error** is

$$P\left(l_2 > l_1 \left| x_{I1}, x_{Q1}\right.\right) f_{X_{I1},X_{Q1}}(x_{I1}, x_{Q1})$$

$$= \frac{1}{\pi N_0}\exp\left[-\frac{x_{I1}^2 + x_{Q1}^2 + \left(x_{I1} - \sqrt{E_I}\right)^2 + \left(x_{Q1} - \sqrt{E_Q}\right)^2}{N_0}\right]$$

$$= \frac{1}{\pi N_0}\exp\left[-\frac{2\left(x_{I1} - \sqrt{E_I}/2\right)^2 + E_I/2 + 2\left(x_{Q1} - \sqrt{E_Q}/2\right)^2 + E_Q/2}{N_0}\right]$$

$$= \frac{1}{\pi N_0}\exp\left[-\frac{2\left(x_{I1} - \sqrt{E_I}/2\right)^2 + 2\left(x_{Q1} - \sqrt{E_Q}/2\right)^2 + E/2}{N_0}\right]$$

Prob. of Error for Noncoherent Receiver (Cont.)

- Hence, the **average probability of error** is

$$P_e = \frac{1}{2}\exp\left[-\frac{E}{2N_0}\right] \times \frac{1}{\sqrt{\pi N_0/2}} \int_{-\infty}^{\infty} \exp\left[-\frac{2}{N_0}\left(x_{I1} - \sqrt{E_I}/2\right)^2\right] dx_{I1}$$

$$\times \frac{1}{\sqrt{\pi N_0/2}} \int_{-\infty}^{\infty} \exp\left[-\frac{2}{N_0}\left(x_{Q1} - \sqrt{E_Q}/2\right)^2\right] dx_{Q1}$$

$$\frac{1}{\sqrt{\pi N_0/2}} \int_{-\infty}^{\infty} \exp\left[-\frac{2}{N_0}\left(x_{I1} - \sqrt{E_I}/2\right)^2\right] dx_{I1} = 1$$

$$\frac{1}{\sqrt{\pi N_0/2}} \int_{-\infty}^{\infty} \exp\left[-\frac{2}{N_0}\left(x_{Q1} - \sqrt{E_Q}/2\right)^2\right] dx_{Q1} = 1$$

Gaussian pdf

$$P_e = \frac{1}{2}\exp\left[-\frac{E}{2N_0}\right]$$

Non-CP noncoherent Binary Frequency-Shift Keying

Noncoherent Binary Frequency-Shift Keying

- In binary FSK, the transmitted signal is

$$s_i(t) = \begin{cases} \sqrt{2E_b/T_b}\cos(2\pi f_i t), & 0 \le t < T_b \\ 0, & \text{elsewhere} \end{cases}, \quad i = 1, 2$$

  - To maintain **orthogonality**, the **transmitted frequency** is set at $f_i = (n_c + i)/T_b$ for some fixed integer n_c

Non-CP

- For the **noncoherent detection**
  - If $l_1 > l_2$: in favor of **symbol 1**
  - If $l_1 < l_2$: in favor of **symbol 0**

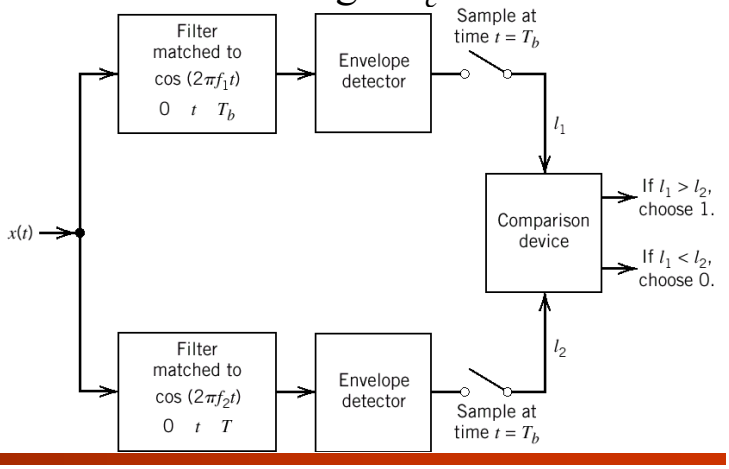

Probability of Error for Noncoherent BFSK

- The noncoherent binary FSK is a special case of noncoherent orthogonal modulation with $T = T_b$ and $E = E_b$
- Hence, the BER for **noncoherent binary FSK** is

$$P_e = \frac{1}{2}\exp\left[-\frac{E_b}{2N_0}\right]$$

- It is not necessary that the FSK signal is a **continuous-phase** signal
  - Noncoherent detection doesn't require phase synchronization
  - Using **different** phases for symbol 1 and symbol 0 is possible

BFSK using coherent detection

$$P_e = \frac{1}{2}\operatorname{erfc}\left(\sqrt{E_b/2N_0}\right)$$

Differential Phase-Shift Keying

Differential Phase-Shift Keying (DPSK)

- DPSK is the "**noncoherent**" version of binary PSK.
  - DPSK eliminates the need for synchronizing the receiver to the transmitter
  - By combining two basic operations at the **transmitter**:
    - **Differential encoding** of the input binary sequence
    - Applying **PSK** of the encoded sequence

Differential Encoding of DPSK

- **Differential encoding** starts with an **arbitrary first bit**, serving as the **reference bit**
  - **Symbol 1** is used as the reference bit
- Generation of the **differentially encoded sequence**:
  - Input bit is "**1**": leave the differentially encoded symbol **unchanged** with respect to the current bit
  - Input bit is "**0**": **change** the differentially encoded symbol with respect to the current bit ($0 \rightarrow 1$ or $1 \rightarrow 0$)
- The differentially encoded sequence $\{d_k\}$ is used to shift the sinusoidal carrier phase by **zero** and **180°**

Relative Phase

  - **Symbol 1**: the phase of the signal remains **unchanged**
  - **Symbol 0**: the phase of the signal is shifted by **180°**

Generation of DPSK

- Consider that the input binary sequence $\{b_k\}$ is "10010011"
- The **reference bit** used for differentially encoding is "**1**"
- Let $\{d_k\}$ denote the differentially encoded sequence and $\{d_{k-1}\}$ denote its **delayed version** by **one bit**
- The **complement** of the **modulo-2 sum** of $\{b_k\}$ and $\{d_{k-1}\}$ defines the desired $\{d_k\}$
- The binary symbols 1 and 0 are represented by the transmitted phase 0 and π

$b_k \oplus d_{k-1}$	d_k
$0 \oplus 0 = 0 \Rightarrow$	1;
$1 \oplus 1 = 0 \Rightarrow$	1;
$1 \oplus 0 = 1 \Rightarrow$	0;
$0 \oplus 1 = 1 \Rightarrow$	0;

Input binary sequence $\{b_k\}$		1	0	0	1	0	0	1	1
Delayed version $\{d_{k-1}\}$		1	1	0	1	1	0	1	1
Differentially encoded sequence $\{d_k\}$	1	1	0	1	1	0	1	1	1
Transmitted phase	0	0	π	0	0	π	0	0	0

Probability of Error for DPSK

- DPSK is also **noncoherent orthogonal modulation**
  - It's **orthogonal** only when its behavior is considered over **successive two-bit intervals**; that is, $0 \le t \le 2T_b$
- Let the transmitted DPSK signal in the **first**-bit interval be

  $\sqrt{2E_b/T_b}\cos(2\pi f_c t + \theta)$, corresponds to symbol 1 for $0 \le t < T_b$
- If the input symbol for the **second**-bit interval is also **symbol 1**

$$s_1(t) = \begin{cases} \sqrt{2E_b/T_b}\cos(2\pi f_c t + \theta), & \text{for } 0 \le t < T_b \\ \sqrt{2E_b/T_b}\cos(2\pi f_c t + \theta), & \text{for } T_b \le t < 2T_b \end{cases}$$ **unchanged**

- If the input symbol for the **second**-bit interval is also **symbol 0**

$$s_2(t) = \begin{cases} \sqrt{2E_b/T_b}\cos(2\pi f_c t + \theta), & \text{for } 0 \le t < T_b \\ \sqrt{2E_b/T_b}\cos(2\pi f_c t + \theta + \pi), & \text{for } T_b \le t < 2T_b \end{cases}$$ **changed**

Probability of Error for DPSK (Cont.)

- The DPSK signals $s_1(t)$ and $s_2(t)$ are indeed **orthogonal** over the **two-bit interval** $0 \le t \le 2T_b$
  - A special form of **noncoherent orthogonal modulation**
  - Previous bit interval ($0 \le t \le T_b$) and current bit interval ($T_b \le t \le 2T_b$)
  - In comparison with the binary FSK, the difference is $T = 2T_b$ and $E = 2E_b$

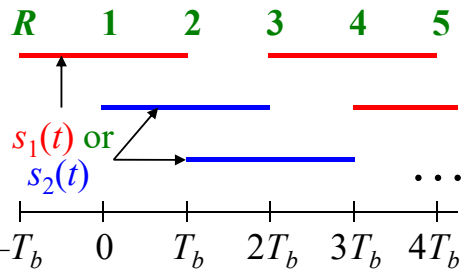

- Hence, the BER for DPSK is given by

$$P_e = \frac{1}{2}\exp\left[-\frac{E}{2N_0}\right] = \frac{1}{2}\exp\left[-\frac{E_b}{N_0}\right]$$

BPSK: $P_e = \frac{1}{2}\operatorname{erfc}\left(\sqrt{E_b/N_0}\right)$

  - DPSK provides **a gain of 3 dB** over binary FSK using noncoherent detection for the same E_b/N_0

DPSK Transmitter

- The DPSK transmitter consists of two functional blocks:
  - **Logic network and one-bit delay (storage) element**: convert the **raw input binary sequence** $\{b_k\}$ into the **differentially encoded sequence** $\{d_k\}$
  - **Binary PSK modulator**: the output of which is the desired DPSK signal.

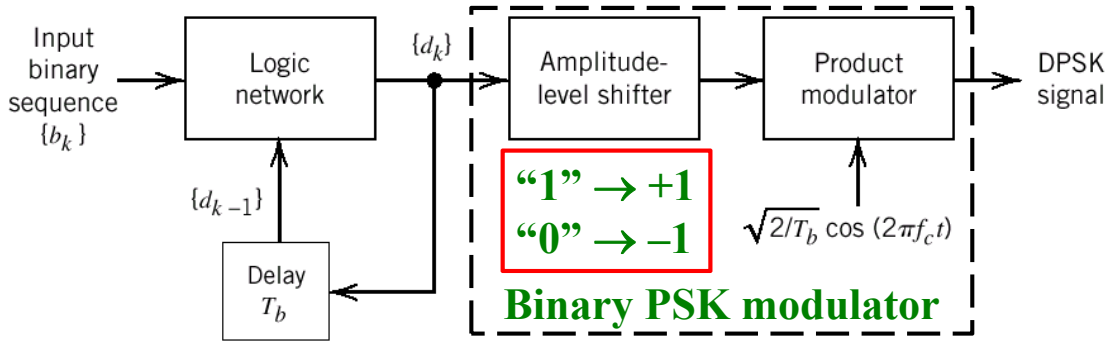

DPSK Receiver

- To deal with the unknown phase θ, the receiver equips with an **in-phase** path and a **quadrature** path
- Over the **two-bit** interval $0 \le t \le 2T_b$, we define the signal-space as $(A\cos\theta, A\sin\theta)$ and $(-A\cos\theta, -A\sin\theta)$, A: carrier amplitude

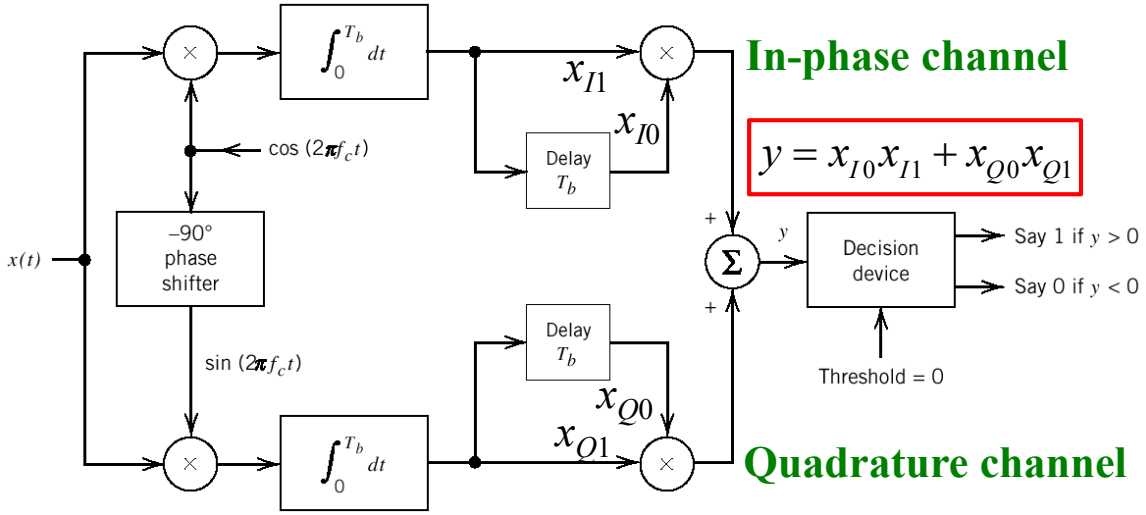

DPSK Receiver (Cont.)

- The receiver measures the coordinates (x_{I0}, x_{Q0}) at time $t = T_b$ and then measures (x_{I1}, x_{Q1}) at time $t = 2T_b$
  - $\mathbf{x}_0 = [x_{I0}, x_{Q0}]^T$ and $\mathbf{x}_1 = [x_{I1}, x_{Q1}]^T$
- The issue to be resolved is whether these two points map to **the same signal point** or **different ones**
- If $\mathbf{x}_0^T \mathbf{x}_1 = x_{I0}x_{I1} + x_{Q0}x_{Q1} > 0$
  - The two points are roughly in the **same direction** ⇒ **Symbol 1**
- If $\mathbf{x}_0^T \mathbf{x}_1 = x_{I0}x_{I1} + x_{Q0}x_{Q1} < 0$
  - The two points are roughly in **different direction** ⇒ **Symbol 0**

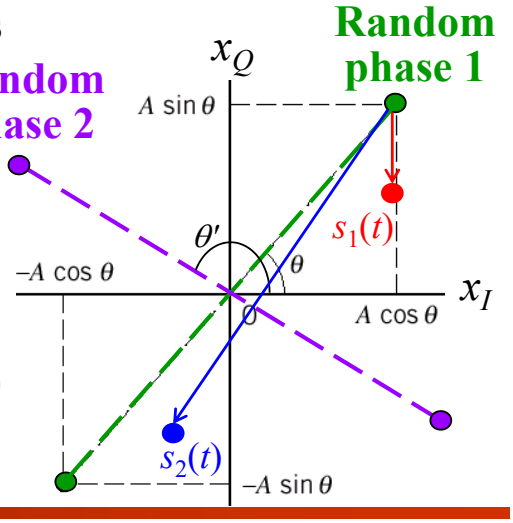

DPSK Receiver (Cont.)

- Considering **maximum-likelihood** (ML) decision rule, we need to test whether the phase is unchanged (symbol 1) or changed by π (symbol 0) over **successive two-bit intervals**.
- The **first**-bit and **second**-bit signal points: (x_{I0}, x_{Q0}) and (x_{I1}, x_{Q1})
  - If the signal point $S_2 = (x_{I1}, x_{Q1})$ is **closer to** $S_1 = (x_{I0}, x_{Q0})$ ⇒ the phase is **unchanged** ⇒ **Symbol 1**
  - If the signal point $S_2 = (x_{I1}, x_{Q1})$ is **closer to** the image $\dot{S}_1 = (-x_{I0}, -x_{Q0})$ ⇒ the phase is shifted by **180°** ⇒ **Symbol 0**
- The **decision-making** process is based on the binary-hypothesis test rule: the distances between (x_{I1}, x_{Q1}) and $(x_{I0}, x_{Q0})/(-x_{I0}, -x_{Q0})$
  - If $d(S_2 \leftrightarrow \dot{S}_1) > d(S_2 \leftrightarrow S_1)$ ⇒ **Symbol 1**
  - If $d(S_2 \leftrightarrow \dot{S}_1) < d(S_2 \leftrightarrow S_1)$ ⇒ **Symbol 0**

DPSK Receiver (Cont.)

- The decision variable is

$$\delta \triangleq \left[d\left(S_2 \leftrightarrow \dot{S}_1\right) - d\left(S_2 \leftrightarrow S_1\right) \right] \Big/ 4$$

Distance to $(-x_{I0}, -x_{Q0})$ **Distance to (x_{I0}, x_{Q0})**

$$= \left[\left(\left(x_{I1} + x_{I0}\right)^2 + \left(x_{Q1} + x_{Q0}\right)^2 \right) - \left(\left(x_{I1} - x_{I0}\right)^2 + \left(x_{Q1} - x_{Q0}\right)^2 \right) \right] \Big/ 4$$

$$= \left(x_{I0}x_{I1} + x_{Q0}x_{Q1}\right) = \mathbf{x}_0^{\mathrm{T}}\mathbf{x}_1$$

- Therefore, we can use $\delta = \mathbf{x}_0^{\mathrm{T}}\mathbf{x}_1$ for data decision
  - If $\delta > 0 \Rightarrow$ **Symbol 1**
  - If $\delta < 0 \Rightarrow$ **Symbol 0**

Homework

- **You must give detailed derivations or explanations, otherwise you get no points.**
- Communication Systems, Simon Haykin **(4th Ed.)**
- 6.26;
- 6.33;